PLAN AND SPECIFICATION QUESTIONS

Project Name: Vibra Bismarck Rehabilitation Hospital
Architect: EAPC
Bid Date: February 19, 2025

Question#	Plan Sheet / Specification	Date of Question	Question	Answer
1	Keynote 3, S201	1/30/2026	Keynote 3 on S201 indicates to provide " 12" THICK x 48" WIDE x STAIR WIDTH THICKENED SLAB @ STAIR LANDING W/ (3) #5 BARS CONT @ BTM". Should there be anchor bolts at the bottom of these stairs to catch the stringers/embed plate? No further information was provided for these stairs in this bid package. Please also provide dimensions off of gridlines for the location of these thickened slabs.	Most likely yes, as part of the delegated stair design. We sometimes add a detail and if needed and copy/check 14/S601 for 20237800. Location is to be GC verified and coordinated with delegated stair designer/fabricator.
2	Keynote P7 / C4.0	1/30/2026	Are sidewalks shown on drawings supposed to be reinforced? No reinforcing can be found in details.	Sidewalk is to be unreinforced other than tied to back of adjacent curb as noted in curb detail.
3	A003, C3.0, C4.0, C5.0, S001	1/30/2026	At the exterior enclosures there is CMU shown and information regarding CMU is on page S001, however no spec section for CMU is provided within the project manual. Please provide this information.	CMU is minimal on the project and not complex, spec notes on drawings are sufficient.
4	C5.0	1/30/2026	All plantings around the perimeter of the property are shown to be placed directly on top of existing utility lines and/or structures. Should these be placed in a different location to prevent future issues/damages to existing utilities?	Plantings shall be field adjusted as necessary to avoid utility conflict once marked in field during construction.
5	C2.0	1/30/2026	Keynote R9 on sheet C2.0 indicates to "COORDINATE WITH LOT OWNER TO SOUTH FOR RELOCATION OF FENCE TO THEIR PROPERTY". Please provide contact information for this property owner.	Property owner to south is Basin Electric Power Cooperative 701-223-0441
6	C4.0	1/30/2026	The entrance/exit to the property does not contain a STOP sign when exiting the property onto 43rd AVENUE NE. Should a stop sign be added here?	No STOP sign is required.
7	C5.0	1/30/2026	Sheet C5.0 indicates keynotes R1, R2, R3, R4, R5, R6, I1. All of these keynotes are not placed upon the drawings and illude to an irrigation system to be provided. Please advise if an irrigation system is provided in this bid package. Please also indicate where the irrigation stub out connection/pedistal/controller location is to be made, and provide a location/electrical outlet/placement regarding keynote R6 on sheet C5.0.	R1 indicates that the contractor shall design and provide a price for an irrigation system on all landscaped and grassed area on the site. (Irrigation contractor will provide design and price). See attached exhibit for irrigation stub and controller location.
8	C5.0	1/30/2026	Sheet C5.0 keynote S3 indicates "SEED SHALL BE CLASS IIB IN ALL AREAS DEPICTED ON PLAN.", however no seed mix design is provided regarding his seed mix, mulch, or specification issued for this mix/class of mix. Please provide further information regarding this seed mix and class type.	Refer to section 1202,1203, and 1204 of the City of Bismarck Construction Specifications. Link Below to specification: https://www.bismarcknd.gov/DocumentCenter/View/44701/2024-City-Specifications-FINAL
9	C5.0	1/30/2026	Sheet C5.0 keynote S4 indicates "ALL AREAS SEEDED ON SLOPES 4:1 OR GREATER SHALL HAVE EROSION CONTROL BLANKET TYPE 1 AND ALL AREAS LESS THAN 4:1 SHALL BE HYDRO-MULCHED. EROSION CONTROL BLANKET AND AND HYDRO-MULCH SHALL BE PERFORMED IN ACCORDANCE WITH THE MOST RECENT CITY OF BISMARCK CONSTRUCTION SPECIFICATION FOR MUNICIPAL PUBLIC WORKS IMPROVEMENTS." Please advise where these locations are to occur.	See attached exhibit for erosion control blanket location.
10	C5.0	1/30/2026	Are the trees in the boulevard on the South side of 43rd Avenue to be new trees?	These are new trees and are included in the Plant Palette. There are no existing trees on the south side of 43rd in front of this property.
11	S201	1/30/2026	What is the elevation, reinforcing requirements & thickness of the concrete slab in the elevator pits? Does it align with the top of footing elevation of 95'-0"? Details 9 and 10 appear for the slab in the bottom of the pit to be the same thickness as the footing thickness, however in 3 of the corners F-1 is shown, but 1 corner F-3 is shown. These are the same thickness, however different reinforcing is required. Please advise.	There is no slab in the elevator pit; see note #5, TFE callout on plan and details that are cut around the shaft. There are F-# footings at the corners of the pit with their own scheduled size, thickness, and reinforcing.
12	Civil Drawing Sheets, E001	1/30/2026	Is there a monument sign placed on the project? If so, Where?	No, Future, By Owner.
13	Keynotes P3 and P4, Sheet C4.0	1/30/2026	Keynotes P3 and P4 on sheet C4.0 provide information regarding the asphalt mix design and to reference pavement section details on this sheet, however no Tack Coat is shown between each asphalt lift. Please advise if a Tack Coat is required.	Refer to section 400 of the City of Bismarck Construction Specifications. Link Below to specification: https://www.bismarcknd.gov/DocumentCenter/View/44701/2024-City-Specifications-FINAL
14	Keynote AN 44 / A502	1/30/2026	Ceiling mounted patient lifts are noted as OFCI. These are certified systems and needs to be installed by the MFG's certified installer. This and its supplemental supports either need to be made CFCI or OFOI. Contractors preference is CFCI.	This should be OFOI, vibra porvided the Arjo.PHD.Maxi Sky 2 Plus as BOD

15	Kitchen Drawings (All)	1/30/2026	Rough in for kitchen equipment by the Contractor. Who makes final connections of the kitchen equipment?	Baring will provide all equipment, final equipment connections to be completed by respective trades.
16	M400	1/30/2026	Sheet notes a screen wall is to be provided around the RTU's. Is this furnished by the same MFG as the RTU's? Or intended to be provided by a spec section outside of DIV 23? How does it attach to the unit or unit curb? How does one access the unit after this is installed? Provide a detail to outline attachment and flashing of roof around screen structure.	Screen walls are to be provided as accessories with Roof top units by rooftop unit suppler. The screens are attached to the unit curb or the unit, to be coordinated with manufacturer. Screen will allow for access to unit with sliding panels or removable panel. Basis of design is Spinnaker Industries. Color of screen to be selected by architect. No connecting into the roof is needed. See notes on rooftop unit and energy recovery unit schedule.
17	A202, A801	1/30/2026	Sheet A801 indicates door 2001B to be a 6'-0"x7'-0" Wood Door and Wood Frame. The schedule further clarifies this is to be a "BF" door which when reviewing sheet A202 is a bi-fold closet door, however a door elevation, details, or spec section for this door cannot be found. Is this to be included within the 08 1416 - Flush Wood Doors spec? If not, please provide further details and a specification for this door.	ADL room is for adult daily living training. Room is intended to convey residential use. Provide 6'-0" wide by 80" tall solid wood core bi-fold door by Jeld-Wen or equal.
18	4/A003, S201	1/30/2026	Detail 4/A003 indicates (4) 6" bollards on the inside of the trash enclosure. Sheet S201 indicates (2) near the East walls of the enclosure where a gate is shown on 4/A003. Please confirm which is correct.	There are (4) 6" bollards on the interior as well as (2) suppotng the gate, see detail 1/003. Structural to revise drawings.
19	S201, 4/A003, C4.0	1/30/2026	Between sheet S201, A003, and C4.0, no information can be found regarding the elevation of the Generator Pad, Dumpster Pad, and Bulk Oxygen Tank Pad. Please provide this information.	STRUCTURAL: Elevations are noted to coordinate with others; civil shall verfy elevations such that they fit with site grading / CIVIL???
20	Electrical, Spec Section 26 3213; Part 2; Section 2.05; Subsection C	1/30/2026	Spec Section 26 3213; Part 2; Section 2.05; Subsection C indicates to provide a wall-mount remote annunciator for the generator. Where is this to be located? Should there be multiple annunciator panels?	This is currently located at nurse station 1016
21	E100	1/30/2026	Sheet E100 shows parking spaces where the Generator Pad and Bulk Oxygen Tank are located. Can this be corrected?	Civil and Structural, whose bid packages are responsible for this scope of work, are correct and govern. Electrical background will be updated in a future issuance.
22	G101, G201	1/30/2026	Sheet G101 shows the smoke compartment line to the East of gridline H, whereas the occupancy separation between INSTITUTIONAL and BUSINESS on G201 is shown near gridline G. Shouldn't these align? Is a 2 hour fire barrier not required at demising walls between INSTITUTIONAL and BUSINESS occupancies?	The plans are correct smoke compartment devisions do not related to occupancy separation. Furthermore, Group 1-2 and group B do not require a separation.
23	G101, A522	1/30/2026	Details 1 and 2 on sheet A522 call for the walls of the elevator to be wall type C9. C9 is a 1-hour fire barrier per A021 and consistent on G101, but is shaft liner required at this location to maintain the rating?	Use wall type C9 as indicated since the shaft is accessible from both sides.
24	A201, A202, A522, S202	1/30/2026	Sheet A201, A202, and A522 indicate something separating the two elevator shafts, but 4/A522 only shows the foundation wall separating the pits. Is that all that is required in this shaft, or should there be a wall separating the shafts to allow the rails to be on each side of each elevator as referenced on S202 with the "W8x10 (centered on elevator separation wall)"?	Only the pits will be seperated. Plans have been revised.
25	F201	1/30/2026	Are there any special requirements for sprinkler system above the cooking area in the kitchen? Does the kitchen vendor/kitchen include a kitchen hood that contains a standalone ANSUL system?	The grease hood has a standalone ansul system as indicated on food service equipment plans.
26	E802	1/30/2026	Is a VFD required for MAU-1 fans? If so, who is supplying the VFD's and making the connections? Are building controls tying into the MAU-1 to control the MAU or its speeds? How is this MAU-1 controlled?	MAU-1 is provided by the kitchen supplier. The unit will come with a VFD. The unit will be Captive Aire DCV-1111. The MAU-1 will be interlocked through the exhaust fan and be controlled by the BAS.
27	23 0993; Part 2; Section 2.12; Para E	1/30/2026	23 0993; Part 2; Section 2.12; Para E indicates "KEF-2: Fan shall be controlled by wall switch at the dishwasher. Fan status shall be monitored by the BAS and alarm if fan fails to start.". Is this fan supposed to modulate speed in BAS similar to KEF-1/KH-1/MAU-1 interlock, or is KEF-2 supposed to run 100% after switch is activated?	Run KEF-2 fan at 100% speed, on/off operation from switch.
28	P200 / C3.0	1/30/2026	P200 indicates (1) 4" domestic water service, (1) 1" emergency water service, and (1) 6" fire sprinkler service near the Northwest corner of the building, however sheet C3.0 only shows (1) 4" domestic water service and (1) 6" emergency fire service. No 1" emergency water service is shown on C3.0. Please revise C3.0 to include this 1" emergency water service, revise P200 to remove it, or advise how the 1" emergency line on P200 is to connect to the civil piping outside of the building footprint. If this 1" line is connected to the same line as the 4" main, what happens when there is a utility issue with the main line coming to the building?	CIVIL NEEDS TO PROVIDE AN ADDITIONAL 1" WATER SERVICE

29	M201	1/30/2026	Sheet M201 shows the 1" gas line for the kitchen equipment, but shows a pressure regulator 3/4" drops, then further down the line the gas line increases to 2". Should this all be 1" piping with 3/4" drops? Are the drops supposed to be routed in the wall to the North then stub out at a certain height?	The incoming gas piping is 2 psi and the regulator reduces gas pressure to inches water column for the applicences requiring a large size pipe at the reduced pressure. Pipe is run horizontally with gas shut off valve and stubs out to flexible connections.
30	Mechanical / Kitchen	1/30/2026	M301 indicates ductwork drops to the kitchen hood to MAU-1 and KEF-1. Are these duct drops or ductwork required to be grease ductwork or wrapped in fire insulation?	The ductwork from the type1 kitchen hood to the inlet of the grease exhauist fan is grease ductwork. It is required to be wrapped in fire rated insulation. Supply ductwork from MAU-1 shall be insulated. Refer to specs section 23 0713 and 23 3113
31	A504	1/30/2026	Detail 1/A504 indicates an opening between the 1088-Dirty Dish and the 1056 - Dining/Recreation area, but no elevations or further details are provided for this opening. What is this opening to be comprised of? Is there a solid top that acts as a surface between the two rooms? Please provide further details regarding this passthru.	The pass-through window is a complete stainless steel assembly provided and installed by Baring Foodservice as item 33A on the issued kitchen equipment drawings. Provide a 3'-0" x 3'-0" rough opening above kitchen counter backsplash.
32	07 2400; Part 2; Section 2.2; Para A and 07 2500; Part 2; Section 2.1	1/30/2026	As described in spec section 07 2400; Part 2; Section 2.1; Para A, the EIFS system basis of design is "Dryvit Outsulation X EIFS, Class PB with Moisture Drainage: www.dryvit.com/#sle.", and further in section 2.2; Para A states " Exterior Insulation and Finish System: DRAINAGE type; reinforced finish coating on mechanically-fastened insulation board over sheet-type combination drainage layer/water-resistive barrier over substrate; provide a complete system that has been tested to showcompliance with the following characteristics; ", when reviewing Dryvit's website, this appears to be an entire system with integrated fluid applied weather barrier/drainage layer, insulation, mesh, and first/finish coats. Further, spec section 07 2500; Part 2; Section 2.1 indicates a fluid applied weather barrier system. Is that the intent to have a weather barrier system provided with the basis of design EIFS system, or is the intent to have a weather barrier separate from the basis of design EIFS system? Please clarify the intent of these systems and interaction.	Provide and install per Dryvit manufacturer system, assembly, and installation standards.
33	Kitchen Drawings / Equipment	1/30/2026	Is any of the kitchen equipment supposed to sit on concrete curbs? If so, please provide that information.	41B and 42B on the issued kitchen equipment schedule indicate mounting dunnage/curb to be provided/installed by general contractor.
34	P301	1/30/2026	Is the oxygen tank farm intended to have BAS monitoring that needs to be included?	The bulk oxygen tank is provided by owner. The medical gas alarm system shall provie tank leve, high and low pressure alarms to the medical gas master and slave alarms panels.
35	A441	1/30/2026	A441 shows several locations where the spray applied fire protection carries to the exterior of the building above the metal soffit canopies. Is this correct? Should this be spray foam insulation instead? If it needs to change to spray foam, please provide a spec section.	The drawings are correct.
36	A602, 07 4113	1/30/2026	Details 3 and 4 on sheet A602 indicate hatching directly above the metal panel soffit and the weather barrier to be applied between that and the metal panel soffit. What is this intended to be? How should the weather barrier system attach to this and allow for the soffit to be vented as indicated in the 07 4113 spec?	Hatch indicates framing metal soffit. Meal soffit attached to structural framing. A weather barrier is not needed. See Specefication notes for metal soffit venting .
37	4/A521	1/30/2026	Detail 4/A521 indicates "WHERE INDICATED IN PLAN PROVIDE TO EXTENT REQUIRED TO PROTECT WHERE OVERHEAD CLEARANCE LESS THAN 80 INCHES.", however this railing is only indicated inderneath the North stair. Is this supposed to be placed at the 1st floor landing underneath all stair towers? Is this railing to be embedded in the concrete slab or surface mounted to the face of the slab? Please provide further information and details.	Yes, railing should be added to all stair wells. Please were revised. The railing should be embedded into the slab. Note added to detail 4/A521.
38	6/A601	1/30/2026	Detail 6/A601 indicates the column wrap detail on the exterior support columns at each of the canopies, and further shows spray applied fireproofing around the column, then gets encased in something. Is fireproofing required at columns outside of the building footprint?	Since all the canopies are attached to the building, all strucutural framing requires spray applied fire proofing.
39	5/A602	1/30/2026	Detail 5/A602 indicates a prefinished metal wrap on the top side and bottom side of the canopy overhangs. Are both of these intended to conform to the 07 4113 spec?	Note revised to indicate soffit.
40	14 4200	1/30/2026	Is the elevator required to have an internal call-out feature, landline (POTS or Analog), or will that be completed via the network through the Owners IT vendor?	Network by Owner IT.
41	14 4200 / F201 / F202	1/30/2026	Are sprinkler heads required in the top of the elevator shafts?	The Entire facility shall be sprinklered per NPA 13. Yes sprinkler heads are required for the elvator shaft.

42	A003 / S201 / C4.0 / S501	1/30/2026	Sheet S201 and S501 indicates the measurements of the medical gas tank pad as "MECHANICAL CONTRACTOR TO VERIFY", however dimensions are provided on sheet A003 and S501. Are the measurements on A003 matching the vendors requirements? Finally, please confirm what grade the pad is to be set at. No grade can be found on sheet C4.0. Is this supposed to be set at top of curb elevation? Is the curb supposed to drop on each side of the pad and be flat across the entrance of the pad? Please provide further information and the vendors drawings for use.	5/A003 contains dimension consistent with specified tank. Mechanical contractor to verify with final approved equipment shop drawings prior to install as stated on the document. DUPLICATE QUESTION TO 19
43	C4.0 / S201 / A201	1/30/2026	Sheet S201 and A201 indicate a stoop outside of door 1040B on the West side of 1040-DAY ROOM, however C4.0 does not show any concrete sidewalks/pavement connecting to this stoop, should concrete sidewalks be provided here?	No. Not a means of egress.
44	Interior ADA / Evacuation / Room Signage	1/30/2026	Will the Owner be procuring all interior ADA, evacuation, and room signage, or will that be the responsibility of the contractor? No room signage schedule or layouts are provided in the construction documents.	Signage by Owner.
45	Wall Type E3 / A001	1/30/2026	No details can be found regarding the base of wall and top of wall conditions at the EIFS walls at the Generator, Medical Gas, and Trash Enclosures. Please provide these details.	There are no wall types shown on A001. See A021 for wall type or Wall Section 2/A003 which shows the wall section for exterior enclosure.
46	A801	1/30/2026	Sheet A801 indicates doors 1035 and 1037 to be aluminum doors and frames, but indicates the frame types to be "HM-10", are these doors supposed to be aluminum, or would insulated hollow metal doors and frames be better suited for this situation? For reference, opening 1039A is shown as a HM door and HM frame.	1035, 1037, 1039A to all be insulated hollow metal doors in hollow metal frames.
47	A801 / 08 4229	1/30/2026	Sheet A801 and spec section 08 4229 do not indicate anything regarding access control at doors 1001 and 1003. Is any access control required for these openings? Are these doors to have any keyed locking functions?	Standard proximity sensor, with programmable hours. The doors should have an on/off hold open switch to control the power, key operated. There should be an after-hours feature to secure the breakaway panels from being forcibly opened from the building exterior. The door sensor will allow for after-hours automatic door operation from the interior side only.
48	A801 / 08 7100 / 08 7100.13	1/30/2026	Group 14 on sheet A801 for openings 101 and 102 indicate a "DROP PIN". What is this to be used for? Spec section 08 7100 does not indicate anything for a "DROP PIN" and hardware group 14 is not shown in spec section 08 7100.13. Additionally, is the "STAINLESS STEEL EXTERIOR GRADE LOCKSET" storeroom function? Passage function? Please provide further information.	One leaf of each gate to have "drop bolt" or "drop rod" to manually secure door into surface below when not in use. Lock set to be storeroom function.

49	21/A601, 22/A601, 9/A504, 10/A504, 2/A507, 11/A802	1/30/2026	Details 9 and 10 on sheet A504 provide overall view of the reception area and elevation view of the reception desk facing East. Detail 9/A504 indicates a "2" reference elevation for the West face of the reception area similar to elevation reference 10, but detail 2 is not on the sheet. Detail 2/A507 indicates "RECEPTION - WEST". Please confirm this is the correct elevation to use. If so, please correct 9/A504 to be accurate. Additionally, details 21 and 22 on A601 and 2/A507 indicate that there is supposed to be GL-1 on top of the cabinets at this location, but no further details are provided regarding how the glass is supposed to sit on top of the cabinets/countertops, how the glass is held in place at the jambs, and how the glass is held in place at the head condition. Please provide these details. Do these cabinets back up to a wall that supports the glass? What is on the other side of the cabinets in the hallway looking to the East? Further, 2/A507 does not indicate what cabinets/countertop type is to be provided. Please provide this information and details as to how the glass & countertop are to interact at this location. Finally, the elevation view of GL1 in detail 11/A802 shows the elevation of glass starting at 3'-2" and being 5'-10" tall , however detail 2/A507's countertop is at 2'-10" the gyp soffit above is located at 9'-0". Similar to the previous question, how is the bottom of the glass supported and the top of the glass supported? are the joints between the GL-2 sections supposed to be caulked or left open?	Detail 2/A507 was moved to sheet A504 for clarity. 10/A504 is the correct detail to reference. These cabinets back up to a wall that supports the glass. Cabinet tags were added to indicate type. Countertop height is 2' 10" but with the backsplash we are up to 3' 2", making it a flush difference where the wall ends and glass starts and the height of the cabinet and backsplash. detail 9/A821 added to show jamb and head details. leave gaps between sections open.
50	A801	1/30/2026	Sheet A801 indicates door frame type "PAT" throughout the door schedules for 1st and 2nd floor, however "PAT" frame type is not indicated in the frame type schedule. Should these be "BD-00"? Additionally, all of these openings appear to be sliding doors, however no spec section for sliding doors is provided. Please clarify if these are sliding barn-style doors, provide an applicable spec section, and update the door/frame/hardware schedule accordingly. Finally, all of these openings indicate hardware group "2". Hardware group "2" on sheet A801 indicates "Hardware by Door Manufacturer", but when referencing spec section 08 7100.13, hardware group #02 and #02A are entirely different. Please provide a revised hardware group or clarify what the intent is for hardware at all of these openings.	BD-00 is correct. Sliding door, frame, and hardware by sliding door manufacturer. Basis of design is Serenity Sliding Door Systems MedSlide product.
51	A901.B	1/30/2026	Sheet A901.B indicates "AI16" in the 1003-RECEPTION AREA and indicates "ALTERNATE: PROVIDE PRICING FOR WOOD PANEL WALLCOVERING IN LIEU OF PAINT.". Is this considered a contract alternate? What "WOOD PANEL WALLCOVERING" is to be priced? Should this be priced floor to ceiling height? Please provide these details and elevation views, along with a product and applicable specification section for the alternate.	Yes a contract alternate. Priced floor to ceiling. Will provide any detail drawings and specifications.
52	A921, 12 2400, A301, A302, A901.A, A901.B, A902.A, A902.B	1/30/2026	Sheet A921 indicates "RS-1", but does not clarify if RS-1 is a manual or motorized shade. Specification section 12 2400 indicates both manual and motorized shades, but further indicates the basis of design under section 2.2, subsection B as MANUAL, and section 2.2; Subsection C as MOTORIZED. Which this correct? Additionally, what type and size of shade facia is to be provided? Finally, detail 3/A821 indicates "WINDOW TREATMENT WHERE APPLICABLE - SEE RCP FOR TYPE AND LOCATION", however no shades / notes related to shades are indicated on sheets A301 and A302. Is this detail supposed to reference A901.A, A901.B, A902.A, and A902.B where keynote "AI05" is indicated ?	Manual roller shades please. AI05 is indicated on A901.A, A901.B, A902.A, A902.B. Dual roller facia, per manufacturers requirements to conceal the shade mounting.
53	A901.A, A901.B, A902.A, A902.B, A921	1/30/2026	The A901 and A902 series sheets have several locations that indicate a note for "SEE 21/A921 FOR ALL WALL FINISHES", this note is used both staff and patient restrooms. Is detail 21 to apply to all of those locations where 4'-0" tile is shown, and details 18, 19, and 20 on A921 only applicable for the locations where showers are specifically present? Please confirm.	Confirmed. Detail 21 on A921 is to indicated the install pattern and height and any other trims and accessories related to the tile install on the walls. Details 18, 19, & 20 are to indicated specifically the solid surface shower walls and all of the trims and accessories for that installation.
54	A901.B	1/30/2026	Sheet A901.B indicates FRP lining the entire Kitchen, Admin Corridor, Receiving Alcove, and Soil room. What height should this be installed to? Is this supposed to be FRP and not wall protection? If this is to be wall protection, what type of wall protection should be provided?	FRP as indicated. Installed above 6" high integral coved base, refer to detail 11/921. 4' high above base. Sheets to be ordered in 4' x 8' sheets as noted in finish materials list.

55	Keynote AN 13	1/30/2026	Keynote AN 13 is provided throughout the drawing set and indicates "WALL MOUNTED TV AND BRACKET, 65" AFF, UNO. REFER TO EQUIPMENT DRAWINGS AND LIST. PROVIDE BLOCKING AS REQUIRED. SEE ELECTRICAL FOR POWER & DATA.", however no equipment drawings are provided. Please provide.	Contractor to provide blocking. TV and bracket by Owner.
56	08 3313	1/30/2026	Specification section 08 3313 was issued, however the opening applicable for the spec section cannot be found on the drawing set. Please advise where this specification is to apply.	there are no countertop coiling doors in this project and this section will be removed.
57	08 7100.13	1/30/2026	Hardware set #30 is indicated to be provided for "SLIDING WOOD (BARN) DOORS", and further specified in paragraph A for "All hardware is specified in Section 08 1473.13 - Sliding Aluminum-Framed Wood Doors. Spec section 08 1473.13 is not included within the project specifications nor any information provided in the drawings. Please advise.	Duplicate to question 50
58	2/A521, 16/A521, 6/A605, S203	1/30/2026	2/A521 and section 16/A521 appear to show a ships ladder to the roof hatch via the North stairwell. What is this ships ladder to be made of? How does the ships ladder attach to the wall at this condition? Is there a section cut/detail view of the ships ladder? How far above 2nd floor finish slab should the first rung be? Further, detail 6/A605 indicates the "ROOF ACCESS LADDER/SHIPS LADDER MOUNTED TO STRUCTURES", and further indicates a stiffner between the ladder and a steel angle between the roof hatch framing and roof deck. No angles are indicated on S203. Where are these angles to be placed? Are they to be used to create an opening between the W8x10 beams and W16x26 and W8x10 beam on S203 to create an opening? Finally, no blocking is shown beneath the roof hatch framing on 6/A605. Shouldnt blocking be provided to anchor the roof hatch and elevate it to its proper elevation above the roof line? Please advise.	Keynote AN56 added for wall mounted ladder and blocking. Detail 11/A522 was added for ladder details.
59	G101, G102, A801, E501, E502	1/30/2026	Openings 1023A and 2029 have hardware set 18 on sheet A801 which contains magnetic hold opens. Are these required to be tied to the fire alarm system, and release upon fire alarm being activated? These walls are not listed as Fire Wall or Fire Barrier, but are in 1 Hour Smoke Compartment walls. If so, please indicate these on the fire alarm plans.	Yes, drop on alarm.
60	26 3213	1/30/2026	Spec section 26 3213 does not appear to indicate any language requiring a local or unit-mounted EPO. In previous experience these were required by electrical code. Are these required on this unit? If so, please provide a revised specification section and location to mount .	We will resive the specification
61	07 4113	1/30/2026	Spec section 07 4113 is a METAL ROOF PANELS spec section, where is this to apply? Does this apply to the metal soffit panels at the canopies?	a specification will be added for the soffit panels in a future addendum.

eapc.net

EAPC

Architecture | Engineering

ADDENDUM 1

Addendum #	1	**Date Issued**	02/09/2026

Project Name | Job #	Vibra Health	20251200

Bid Date | Time		

THIS ADDENDUM AMENDS AND BECOMES PART OF THE CONTRACT DOCUMENTS FOR EAPC PROJECT 20251200 DATED 01/28/2026, RESPECTIVELY. EACH BIDDER SHALL ACKNOWLEDGE RECEIPT OF THIS ADDENDUM BY MARKING THE ADDENDUM NUMBER AND DATE ON THE BID FORM.

SPECIFICATIONS

- 00 0110 REVISE table of contents to reflect the changes made below.
- 01 2300 ADDED Entire Spec section – Alternates
- 07 4113 REMOVE Entire spec section – No Metal Roofing Panels on this project
- 07 4213 ADD Entire spec section -Metal Wall Panels (soffit panel info)
- 07 5300 REVISE – 2.3 A Membrane – non-reinforced
  ADD – 2.4 Deck Sheathing A Deck Sheathing: Glass mat faced gypsum panels, ASTM C1177, fire resistant type, ½" thick
  GP – Dens Deck
  USG – Securock Ultralight Glass-Mat roof board
  REVISE – 3.3 C. Attachment of Insulation: Mechanically fasten each layer of insulation to deck in accordance with roofing manufacturer's instructions and FM (AG) Factory Mutal requirements.
- 08 3313 REMOVE entire spec section - Coiling Counter Doors (none on this project)
- 09 7800 ADD Entire spec section - Interior Wall Paneling
- 08 8000 OMIT – 2.5 A – Monolithic Vision Glazing G-1
  OMIT - 2.4 C. IG-11 (none in this project)
- 23 7200 REVISED - 2.1B9b roof curb isolation rails are not required.
- 23 7413 REVISED - Units shall have 2" double wall R-13 insulation.

DRAWINGS

- G100 Revise – Code Analysis showing separation between Group A-2 & Group .
- S003 Added - Continuous Wall Footing Size (WF-5)
- 1/S201 Added - (4) New Bollards to Trash Enclosure.
- S201 Revised - Electrical Generator Continuous Wall Footing Size.
- 1/S202 Added - W beam framing for slab penetrations/openings due to mech chases.
- S501 Revised - Med Gas Enclosure Continuous Wall Footing Size.

- 2/A003 Added – Note for concrete Pier.
- 3/A003 Revise - Parking and drive around med gas enclosure.
- 5/A003 Added – Keynote AS02 for metal roofing over equipment.
- A021 – RA1 Revise – RA1 ½" Glass mat fire resistant type
- 12/A504 Added – Detail in its entirety.
- A801 Removed – Unused glazing types.
- A802 Removed – Unused glazing types.
- 12/A802 Revised – Glazing type to G-2
- P200 Added – irrigation stub out.
  Removed – 1" water service.
- 6/P401 Added – irrigation piping and rpz.
- 1/P801 Added - irrigation stub out

PRIOR APPROVALS

- 22 1006	Mixing Valves	Heat Timer
- 23 0932	DDC Controls	Honeywell
- 23 2114	Expansion Tanks	Calefactio
- 23 2114	Air Separator	Calefactio
- 23 5216	Condensing Boilers	Riello Array
- 26 0000	Lighting	
	Fixture Type	Manufacturer
	A	Lithonia CPXIP
	B, B1, and B2	Lithonia Stack
	S	Healthcare Lighting Archer LED
	V	WAC Lighting Svelte Wall Sconce
- 28 4600	Fire Alarm System	Autocall

ATTACHMENTS

00 0110
01 2300
07 4213
09 7800

G100
S003
S201
S202
S203
S501
S601
A003
A504
A521
A522
A602
A801
A802
A821
A901.A
A901.B
A902.A
A902.B
A921
P200
P201
P401
P801

END OF ADDENDUM #1

TABLE OF CONTENTS

DIVISION 00 -- PROCUREMENT AND CONTRACTING REQUIREMENTS

00 0110 - TABLE OF CONTENTS
00 2113 – INSTRUCTIONS TO BIDDERS
00 3000 – SITE ACCESS PLAN
00 3113 – MILESTONE SCHEDULE OF CONSTRUCTION
00 4100.10 – INDIVIDUAL SCOPE(S) BID FORM
00 4100.20 – COMBINATION BID FORM
00 5200.10 - CONTRACT BETWEEN CONTRACTOR AND SUBCONTRACTOR
00 5200.30 - MATERIAL AND EQUIPMENT PURCHASE ORDER (MPO)
00 6113 - PERFORMANCE AND PAYMENT BOND
00 6276.10 - PAY APPLICATION FORM
00 6276.20 - PARTIAL WAIVER AND AFFIDAVIT (PRE-PAYMENT): SUBCONTRACTOR AND SUPPLIER
00 6276.30 - PARTIAL WAIVER AND AFFIDAVIT (POST-PAYMENT): SUBCONTRACTOR AND SUPPLIER
00 6279.10 - STORED MATERIALS FORMS: BILL OF SALE
00 6279.20 - STORED MATERIALS FORMS: BNON-NEGOTIABLE BAILMENT RECEIPT
00 6500.10 - FINAL WAIVER AND AFFIDAVIT (PRE-PAYMENT): SUBCONTRACTOR AND SUPPLIER
00 6500.20 - FINAL WAIVER AND AFFIDAVIT (POST-PAYMENT): SUBCONTRACTOR AND SUPPLIER
00 7000 - GENERAL CONDITIONS
AIA Document A201-2017, General Conditions of the Contract for Construction
ARTICLE 16 - SUPPLEMENTARY CONDITIONS
00 7200 - PRIME CONTRACT BETWEEN OWNER AND CONTRACTOR
00 7300 - SPECIFIC PROJECT REQUIREMENTS
00 7300.A - ATTACHMENT A - ELECTRONIC DATA RELEASE
00 7310 - SPECIFIC PROJECT REQUIREMENTS: TEMPORARY FACILITIES AND CONTROLS
00 7316 - INSURANCE PROGRAM - DCIP (GL ONLY)
00 7319 - SAFETY REQUIREMENTS
00 7336 - EQUAL OPPORTUNITY
00 9000 - INFECTION CONTROL AND INTERIM LIFE SAFETY MEASURES

DIVISION 01 -- GENERAL REQUIREMENTS

01 1000 - SUMMARY

01 2000 - PRICE AND PAYMENT PROCEDURES
01 2500 - SUBSTITUTION PROCEDURES
01 3000 - ADMINISTRATIVE REQUIREMENTS
01 3216 - CONSTRUCTION PROGRESS SCHEDULE
01 4000 - QUALITY REQUIREMENTS
01 4533 - CODE-REQUIRED SPECIAL INSPECTIONS
01 5000 - TEMPORARY FACILITIES AND CONTROLS
01 6000 - PRODUCT REQUIREMENTS
01 7000 - EXECUTION AND CLOSEOUT REQUIREMENTS
01 7800 - CLOSEOUT SUBMITTALS
01 7900 - DEMONSTRATION AND TRAINING

DIVISION 03 -- CONCRETE

03 1000 - CONCRETE FORMING AND ACCESSORIES
03 2000 - CONCRETE REINFORCING
03 3000 - CAST-IN-PLACE CONCRETE

DIVISION 05 -- METALS

05 1200 - STRUCTURAL STEEL FRAMING
05 3100 - STEEL DECKING
05 4000 - COLD-FORMED METAL FRAMING
05 5000 - METAL FABRICATIONS
05 5100 - METAL STAIRS
05 5113 - METAL PAN STAIRS
05 5133 - METAL LADDERS
05 5213 - PIPE AND TUBE RAILINGS

DIVISION 06 -- WOOD, PLASTICS, AND COMPOSITES

06 1000 - ROUGH CARPENTRY
06 6100 - CAST POLYMER FABRICATIONS

DIVISION 07 -- THERMAL AND MOISTURE PROTECTION

07 1300 - SHEET WATERPROOFING
07 2100 - THERMAL INSULATION
07 2400 - EXTERIOR INSULATION AND FINISH SYSTEMS
07 2500 - WEATHER BARRIERS
07 2600 - VAPOR RETARDERS
07 4113 - METAL ROOF PANELS
07 5300 - ELASTOMERIC MEMBRANE ROOFING
07 6200 - SHEET METAL FLASHING AND TRIM
07 7100 - ROOF SPECIALTIES
07 7200 - ROOF ACCESSORIES

07 8100 - APPLIED FIRE PROTECTION
07 8400 - FIRESTOPPING
07 9200 - JOINT SEALANTS

DIVISION 08 -- OPENINGS

08 1113 - HOLLOW METAL DOORS AND FRAMES
08 1416 - FLUSH WOOD DOORS
08 3100 - ACCESS DOORS AND PANELS
08 4229 - AUTOMATIC ENTRANCES
08 4313 - ALUMINUM-FRAMED STOREFRONTS
08 7100 - DOOR HARDWARE
08 7100.13 - DOOR HARDWARE SCHEDULE
08 8000 - GLAZING
08 8813 - FIRE-RATED GLAZING

DIVISION 09 -- FINISHES

09 2116 - GYPSUM BOARD ASSEMBLIES
09 2216 - NON-STRUCTURAL METAL FRAMING
09 3000 - TILING
09 5100 - ACOUSTICAL CEILINGS
09 6513 - RESILIENT BASE AND ACCESSORIES
09 6516 - RESILIENT SHEET FLOORING
09 6519 - RESILIENT TILE FLOORING
09 6700 - FLUID-APPLIED FLOORING
09 6813 - TILE CARPETING
09 9113 - EXTERIOR PAINTING
09 9123 - INTERIOR PAINTING
09 9600 - HIGH-PERFORMANCE COATINGS

DIVISION 10 -- SPECIALTIES

10 2113.17 - PHENOLIC TOILET COMPARTMENTS
10 2123 - CUBICLE CURTAINS AND TRACK
10 2600 - WALL AND DOOR PROTECTION
10 2800 - TOILET, BATH, AND LAUNDRY ACCESSORIES
10 4400 - FIRE PROTECTION SPECIALTIES
10 5129 - PHENOLIC LOCKERS

DIVISION 12 -- FURNISHINGS

12 2400 - WINDOW SHADES
12 3200 - MANUFACTURED WOOD CASEWORK

DIVISION 14 -- CONVEYING EQUIPMENT

14 2100 - ELECTRIC TRACTION ELEVATORS

DIVISION 20 -- FACILITY SERVICES

20 0513 - COMMON MOTOR REQUIREMENTS

DIVISION 21 -- FIRE SUPPRESSION

21 0523 - GENERAL-DUTY VALVES FOR WATER-BASED FIRE-SUPPRESSION PIPING
21 0553 - IDENTIFICATION FOR FIRE SUPPRESSION PIPING AND EQUIPMENT
21 1300 - FIRE-SUPPRESSION SPRINKLER SYSTEMS

DIVISION 22 -- PLUMBING

22 0516 - EXPANSION FITTINGS AND LOOPS FOR PLUMBING PIPING
22 0517 - SLEEVES AND SLEEVE SEALS FOR PLUMBING PIPING
22 0519 - METERS AND GAUGES FOR PLUMBING PIPING
22 0523 - GENERAL-DUTY VALVES FOR PLUMBING PIPING
22 0529 - HANGERS AND SUPPORTS FOR PLUMBING PIPING AND EQUIPMENT
22 0548 - VIBRATION AND SEISMIC CONTROLS FOR PLUMBING PIPING AND EQUIPMENT
22 0553 - IDENTIFICATION FOR PLUMBING PIPING AND EQUIPMENT
22 0716 - PLUMBING EQUIPMENT INSULATION
22 0719 - PLUMBING PIPING INSULATION
22 1005 - PLUMBING PIPING
22 1006 - PLUMBING PIPING SPECIALTIES
22 1123 - DOMESTIC WATER PUMPS
22 1429 - SUMP PUMPS
22 3000 - PLUMBING EQUIPMENT
22 4000 - PLUMBING FIXTURES
22 6000 - GAS AND VACUUM SYSTEMS FOR LABORATORY AND HEALTHCARE FACILITIES

DIVISION 23 -- HEATING, VENTILATING, AND AIR-CONDITIONING (HVAC)

23 0516 - EXPANSION FITTINGS AND LOOPS FOR HVAC PIPING
23 0517 - SLEEVES AND SLEEVE SEALS FOR HVAC PIPING
23 0519 - METERS AND GAUGES FOR HVAC PIPING
23 0523 - GENERAL-DUTY VALVES FOR HVAC PIPING
23 0529 - HANGERS AND SUPPORTS FOR HVAC PIPING AND EQUIPMENT
23 0548 - VIBRATION CONTROLS
23 0553 - IDENTIFICATION FOR HVAC PIPING AND EQUIPMENT
23 0593 - TESTING, ADJUSTING, AND BALANCING FOR HVAC
23 0713 - DUCT INSULATION

23 0716 - HVAC EQUIPMENT INSULATION
23 0719 - HVAC PIPING INSULATION
23 0923 - DIRECT-DIGITAL CONTROL SYSTEM FOR HVAC
23 0923.10 - HVAC INSTRUMENTATION AND CONTROLS
23 0923.30 - VARIABLE FREQUENCY CONTROLLERS
23 0993 - SEQUENCE OF OPERATIONS FOR HVAC CONTROLS
23 1123 - FACILITY NATURAL-GAS PIPING
23 2113 - HYDRONIC PIPING
23 2114 - HYDRONIC SPECIALTIES
23 2123 - HYDRONIC PUMPS
23 2513 - WATER TREATMENT FOR CLOSED-LOOP HYDRONIC SYSTEMS
23 3113 - METAL DUCTS
23 3300 - AIR DUCT ACCESSORIES
23 3423 - HVAC POWER VENTILATORS
23 3600 - AIR TERMINAL UNITS
23 3700 - AIR OUTLETS AND INLETS
23 3813 - COMMERCIAL-KITCHEN HOODS
23 5216 - CONDENSING BOILERS
23 7200 - AIR-TO-AIR ENERGY RECOVERY EQUIPMENT
23 7413 - PACKAGED OUTDOOR CENTRAL-STATION AIR-HANDLING UNITS
23 7423.13 - PACKAGED, DIRECT-FIRED, OUTDOOR, HEATING-ONLY MAKEUP-AIR UNITS
23 8126 - SPLIT-SYSTEM AIR-CONDITIONERS
23 8200 - CONVECTION HEATING AND COOLING UNITS
23 8216 - AIR COILS

DIVISION 26 -- ELECTRICAL

26 0000 - ELECTRICAL GENERAL REQUIREMENTS
26 0100 - BASIC MATERIALS AND METHODS
26 2200 – LOW-VOLTAGE TRANSFORMERS
26 0400 - ELECTRIC SERVICE
26 0519 - LOW-VOLTAGE ELECTRICAL POWER CONDUCTORS AND CABLES
26 0526 - GROUNDING AND BONDING FOR ELECTRICAL SYSTEMS
26 0529 - HANGERS AND SUPPORTS FOR ELECTRICAL SYSTEMS
26 0533.13 - CONDUIT FOR ELECTRICAL SYSTEMS
26 0533.16 - BOXES FOR ELECTRICAL SYSTEMS
26 0553 - IDENTIFICATION FOR ELECTRICAL SYSTEMS
26 0573 - POWER SYSTEM STUDIES
26 0923 - LIGHTING CONTROL DEVICES
26 2200 - LOW-VOLTAGE TRANSFORMERS
26 2413 - SWITCHBOARDS
26 2416 - PANELBOARDS
26 2713 - ELECTRICITY METERING

26 2726 - WIRING DEVICES
26 2813 – FUSES
26 2816.13 – ENCLOSED CIRCUIT BREAKERS
26 3213 – ENGINE GENERATORS – DIESEL
26 3600 – TRANSFER SWITCHES
26 3633 – CONNECTION CABINETS FOR PORTABLE GENERATORS AND LOAD BANKS
26 4300 - SURGE PROTECTIVE DEVICES
26 5100 - INTERIOR LIGHTING
26 5600 - EXTERIOR LIGHTING

DIVISION 27 -- COMMUNICATIONS

27 0529 - HANGERS AND SUPPORTS FOR COMMUNICATIONS SYSTEMS
27 0536 - CABLE TRAYS FOR COMMUNICATIONS SYSTEMS
27 1000 - STRUCTURED CABLING
27 5116 - PUBLIC ADDRESS SYSTEMS
27 5223 - NURSE CALL/CODE BLUE SYSTEMS

DIVISION 28 -- ELECTRONIC SAFETY AND SECURITY

28 1000 - ACCESS CONTROL
28 2000 - VIDEO SURVEILLANCE
28 4600 - FIRE DETECTION AND ALARM

END OF SECTION 00 0110

This page intentionally left blank

SECTION 01 2300 - ALTERNATES

PART 1 GENERAL

1.1 SECTION INCLUDES

A. Description of Alternates.

1.2 RELATED REQUIREMENTS

1.3 ACCEPTANCE OF ALTERNATES

A. Alternates quoted on Bid Forms will be reviewed and accepted or rejected at Owner's option. Accepted Alternates will be identified in the Owner-Contractor Agreement.

B. Coordinate related work and modify surrounding work to integrate the Work of each Alternate.

1.4 SCHEDULE OF ALTERNATES

A. Alternate No. 1 - 1:
   1. Base Bid Item: Section 09 9123 and Drawing number 1/A901.B; within Reception 1003, North and East walls to receive paint as base bid.
   2. Alternate Item: Section 09 7800 and Drawing number 1/A901.B, 17/A507, 18/A507; within Reception 1003, North and a portion of the East wall to receive IWP-1, installed full height of wall.

PART 2 PRODUCTS - NOT USED

PART 3 EXECUTION - NOT USED

END OF SECTION 01 2300

This page intentionally left blank

SECTION 07 4213 - METAL WALL PANELS

PART 1 GENERAL

1.1 RELATED REQUIREMENTS

A. Section 05 4000 - Cold-Formed Metal Framing: Wall panel substrate.

B. Section 06 1000 - Rough Carpentry: Wall panel substrate.

C. Section 07 2500 - Weather Barriers: Weather barrier under wall panels.

D. Section 07 2700 - Air Barriers: Air barrier under wall panels.

E. Section 07 9200 - Joint Sealants: Sealing joints between metal wall panel system and adjacent construction.

1.2 REFERENCE STANDARDS

A. AAMA 2604 - Voluntary Specification, Performance Requirements and Test Procedures for High Performance Organic Coatings on Aluminum Extrusions and Panels (with Coil Coating Appendix); 2022.

B. AAMA 2605 - Voluntary Specification, Performance Requirements and Test Procedures for Superior Performing Organic Coatings on Aluminum Extrusions and Panels (with Coil Coating Appendix); 2022.

C. ASTM A653/A653M - Standard Specification for Steel Sheet, Zinc-Coated (Galvanized) or Zinc-Iron Alloy-Coated (Galvannealed) by the Hot-Dip Process; 2023.

D. ASTM B209/B209M - Standard Specification for Aluminum and Aluminum-Alloy Sheet and Plate; 2021a.

1.3 SUBMITTALS

A. Product Data - Wall System: Manufacturer's data sheets on each product to be used, including:
   1. Physical characteristics of components shown on shop drawings.
   2. Storage and handling requirements and recommendations.
   3. Installation instructions and recommendations.

B. Shop Drawings: Indicate dimensions, layout, joints, construction details, support clips, and methods of anchorage.

C. Samples: Submit two samples of wall panel and soffit panel, 12 inches by 12 inches (305 mm by 305 mm) in size illustrating finish color, sheen, and texture.

D. Manufacturer's qualification statement.

E. Installer's qualification statement.

1.4 QUALITY ASSURANCE

A. Manufacturer Qualifications: Company specializing in manufacturing products specified in this section with minimum three years of documented experience.

B. Installer Qualifications: Company specializing in installing products specified in this section with minimum three years of documented experience.

1.5 DELIVERY, STORAGE, AND HANDLING

A. Protect panels from accelerated weathering by removing or venting sheet plastic shipping wrap.

B. Store prefinished material off the ground and protected from weather; prevent twisting, bending, or abrasion; provide ventilation; slope metal sheets to ensure proper drainage.

C. Prevent contact with materials that may cause discoloration or staining of products.

1.6 WARRANTY

A. See Section 01 7800 - Closeout Submittals for additional warranty requirements.

B. Finish Warranty: Provide 15-year manufacturer warranty against excessive degradation of exterior finish. Include provision for replacement of units with excessive fading, chalking, or flaking. Complete forms in Owner's name and register with warrantor.

PART 2 PRODUCTS

2.1 MANUFACTURERS

A. Metal Soffit Panels:
   1. Petersen Aluminum Corporation; PAC-750 Soffit: www.pac-clad.com/#sle.
   2. Substitutions: See Section 01 6000 - Product Requirements.

2.2 METAL WALL PANEL SYSTEM

A. Soffit Panels:
   1. Profile: Style as indicated, with venting provided.
   2. Material: Precoated aluminum sheet, 20 gauge, 0.032 inch (0.81 mm) minimum thickness.
   3. Color: As selected by Architect from manufacturer's standard line.

B. Internal and External Corners: Same material, thickness, and finish as exterior sheets; profile to suit system; shop cut and factory mitered to required angles.

C. Expansion Joints: Same material, thickness and finish as exterior sheets; ___ gauge, ___ inch (___ mm) thick; manufacturer's standard brake formed type, of profile to suit system.

D. Trim: Same material, thickness and finish as exterior sheets; brake formed to required profiles.

E. Anchors: Galvanized steel.

2.3 MATERIALS

A. Precoated Aluminum Sheet: ASTM B209/B209M, 3105 alloy, O temper, with smooth surface texture; continuous-coil-coated on exposed surfaces with specified finish coating and on panel back with specified panel back coating.

2.4 FINISHES

A. Exposed Surface Finish: Panel manufacturer's standard polyvinylidene fluoride (PVDF) coating, top coat over epoxy primer.

B. Panel Backside Finish: Panel manufacturer's standard siliconized polyester wash coat.

C. Interior Application, Panel Finish: Panel manufacturer's standard siliconized polyester coating, top coat over recommended primer.

D. High Performance Organic Coating System: Multi-coat, high-durable polyester system; color as indicated on drawings.
   1. Systems:
      a. Two-coat in accordance with AAMA 2604.

E. Fluoropolymer Coil Coating System: Polyvinylidene fluoride (PVDF) multi-coat superior performing organic coatings system complying with AAMA 2605, including at least 70 percent PVDF resin, and at least 80 percent of coil coated metal surfaces having minimum total dry film thickness (DFT) of 0.9 mil, 0.0009 inch (0.023 mm); color and gloss as selected by Architect from manufacturer’s standard line.
   1. Products:
      a. Sherwin-Williams Company; Fluropon: www.coil.sherwin.com/#sle.

2.5 ACCESSORIES

A. Support for Cladding and Continuous Insulation: Thermal clip and rail.
   1. Thermal Clips: Extruded aluminum, with thermal spacer at base and slot at top to allow field adjustment and alignment of rails.
      a. Single Width: 2-15/16-inch (75 mm) wide bracket.
   2. Extruded vertical and horizontal aluminum rails.
   3. Fasteners: Provide support system and cladding attachment fasteners as recommended by system manufacturer in accordance with requirements.

B. Field Touch-up Paint: As recommended by panel manufacturer.

PART 3 EXECUTION

3.1 EXAMINATION

A. Verify that building framing members are ready to receive panels.

B. Verify weather barrier, see Section 07 2500, has been installed over wall panel substrate; see Section 05 4000.

3.2 PREPARATION

A. Install subgirts perpendicular to panel length, securely fastened to substrates and shimmed and leveled to uniform plane, and spaced at intervals indicated.

B. Protect surrounding areas and adjacent surfaces from damage during execution of this work.

3.3 INSTALLATION

A. Install panels on walls and soffits in accordance with manufacturer's instructions.

B. Fasten panels to structural supports; aligned, level, and plumb.

C. Provide expansion and control joints where indicated.

D. Use concealed fasteners unless otherwise indicated by Architect.

3.4 TOLERANCES

A. Offset From True Alignment Between Adjacent Members Abutting or In Line: 1/16 inch (1.6 mm), maximum.

B. Variation from Plane or Location As Indicated on Drawings: 1/4 inch (6.4 mm), maximum.

3.5 CLEANING

A. Remove site cuttings from finish surfaces.

B. Remove protective material from wall panel surfaces.

3.6 PROTECTION

A. Protect metal wall panels until completion of project.

B. Touch-up, repair, or replace damaged wall panels or accessories before Date of Substantial Completion.

END OF SECTION 07 4213

This page intentionally left blank

SECTION 09 7800 - INTERIOR WALL PANELING

PART 1 GENERAL

1.1 SECTION INCLUDES

A. Laminated interior wall paneling.

B. Accessories.

1.2 REFERENCE STANDARDS

A. AAMA 611 - Specification for Anodized Architectural Aluminum; 2024.

B. ASCE 7 - Minimum Design Loads and Associated Criteria for Buildings and Other Structures; Most Recent Edition Cited by Referring Code or Reference Standard.

C. ASTM E84 - Standard Test Method for Surface Burning Characteristics of Building Materials; 2024.

D. ISO 2812-1 - Paints and Varnishes -- Determination of Resistance to Liquids -- Part 1: Immersion in Liquids Other than Water; 2017.

1.3 SUBMITTALS

A. See Section 01 3000 - Administrative Requirements, for submittal procedures.

B. Product Data: Submit manufacturer's descriptive literature for each specified product. Include anchorage devices specific to project substrate types.

C. Shop Drawings: Submit elevations for each application and location. Indicate details of joints and attachments.
   1. Scale of Drawing Elevations: 1/4 inch to 1 foot (1:50), minimum.

D. Certificates: Certify that products of this section meet or exceed specified requirements.

E. Manufacturer's Instructions: Provide manufacturer's installation instructions.

F. Manufacturer's qualification statement.

G. Installer's qualification statement.

H. Maintenance Data: Include recommended instructions, methods, and materials for cleaning glass, aluminum framing, and FRP panels.

I. Warranty Documentation: Manufacturer warranty; ensure that forms have been completed in Owner's name and registered with manufacturer.

1.4 QUALITY ASSURANCE

A. Manufacturer Qualifications: Company specializing in manufacturing products specified in this section, with at least five years of documented experience.

B. Installer Qualifications: Company specializing in installing work of the type specified in this section, and with at least three years of documented experience.

1.5 DELIVERY, STORAGE, AND HANDLING

A. Deliver products to project site in manufacturer's original packaging, marked with manufacturer's product identification.

B. Store panels flat, indoors, on a clean, dry surface. Remove packaging and allow panels to acclimate to room temperature for 48 hours prior to installation.

1.6 WARRANTY

A. See Section 01 7800 - Closeout Submittals for additional warranty requirements.

B. Extended Correction Period: Correct defective work within a 5-year period for _____ commencing on the Date of Substantial Completion.

PART 2 PRODUCTS

2.1 MANUFACTURERS

A. Laminated Interior Wall Paneling:
   1. Soelberg; https://soelbergi.com/all-products/
   2. Substitutions: See Section 01 6000 - Product Requirements.

2.2 REGULATORY REQUIREMENTS

A. Surface Burning Classification: Provide wall paneling assemblies meeting Class A when tested in accordance with ASTM E84.

2.3 LAMINATED INTERIOR WALL PANELING

A. Laminated Wall Panels:
   1. Applications: Wall cladding.
   2. Panel Size: 48 by 96 inches (1219 by 2438 mm).
   3. Thickness: 3/4" or 1 1/8" inch (19 or 30 mm).

B. Materials:
   1. Substrate/Core: Premium MDF.
   2. Facing: Laminate or Paint.
      a. Color: As selected by Architect from manufacturer's standard line.

C. Fabrication: Shop fabricate to greatest extent possible.

D. Accessories:
   1. Adhesive/Joint Filler: Concrete wall adhesive, single-component, high-solids, modified-silane polymer with low VOC content, low odor, and no shrinkage.
   2. Fry Reglet - Reveal L or post termination. Dependent on specific design of panel chosen.

PART 3 EXECUTION

3.1 EXAMINATION

A. Verify existing conditions and substrate flatness before starting work.

B. Verify that substrate surfaces for adhered items are clean and smooth.
   1. Test painted or wall covering surfaces for adhesion in inconspicuous area, as recommended by manufacturer.

C. Start of installation constitutes acceptance of project conditions.

3.2 INSTALLATION

A. Install panels in accordance with manufacturer's instructions.

B. Install panel using Z clips, per manufacturers instructions.

C. Where electrical outlets may be, cut out space in panel for the extended outlet cover to sit. Ensure that the cuts are clean and precise.

D. Install trim with adhesive.

3.3 ADJUSTING

A. Replace paneling installed out of plumb and/or not aligned with adjacent panels or construction.

3.4 CLEANING

A. See Section 01 7000 - Execution and Closeout Requirements for additional requirements.

B. Clean panel faces using cleaning agents and methods recommended by manufacturer to remove soiling.

3.5 PROTECTION

A. Protect installed interior wall paneling from subsequent construction operations.

END OF SECTION 09 7800

This page intentionally left blank

APPLICABLE CODES

CODE	EDITION	ABBV.
○ 2021 INTERNATIONAL BUILDING CODE (IBC)	2021	IBC
○ 2021 INTERNATIONAL FIRE CODE (IFC)	2021	IFC
○ 2021 INTERNATIONAL FUEL GAS CODE (IFC)	2021	IFGC
○ 2021 INTERNATIONAL MECHANICAL CODE (IMC)	2021	IMC
○ 2021 INTERNATIONAL ENERGY CONSERVATION CODE (IECC)	2021	IECC
○ ICC ANSI A117.1 2017	2017	ADA
○ NFPA 70 – NATIONAL ELECTRICAL CODE	2023	NEC
○ NFPA 99 – HEALTH CARE FACILITIES CODE	2012	HFC
○ NFPA 101 – LIFE SAFETY CODE	2012	LSC
○ NATIONAL ELECTRICAL CODE AND THE NORTH DAKOTA STATE WIRING STANDARDS ADOPTED BY THE NORTH DAKOTA STATE ELECTRICAL BOARD	2023	NEC
○ UNIFORM PLUMBING CODE AND THE NORTH DAKOTA STATE PLUMBING STANDARDS ADOPTED BY THE NORTH DAKOTA STATE PLUMBING BOARD	2018	UPC
○ FGI GUIDELINES FOR HOSPITALS	2022	FGI

PROJECT DESCRIPTION

PROJECT CONSISTS OF THE DEVELOPMENT OF A NEW, SPRINKLERED, GROUND-UP FACILITY OF 50,730 SQUARE FEET SPLIT ACROSS TWO STORIES. 27,549 SQUARE FEET ON THE FIRST FLOOR AND 23,181 SQUARE FEET ON THE SECOND FLOOR. THE FACILITY WILL HAVE 50-BEDS AND WILL BE APPROXIMATELY HALF LONG-TERM ACUTE CARE (LTAC) AND HALF INPATIENT REHAB FACILITY. PARKING IS ANTICIPATED TO BE 130 STALLS, WITH DETAILED DESIGN, PLANNING, AND CONSTRUCTION DOCUMENTS PROVIDED BY THE OWNER'S CIVIL ENGINEER UNDER A SEPARATE CONTRACT.

OCCUPANCT GROUPS

IBC	LSC
GROUP I-2, CONDITION 2	HEALTHCARE
GROUP B – BUSINESS	BUSINESS
NON-SEPERATED MIXED USE. OCCUPANCY GROUPS ARE LISTED ABOVE.	

2

GROUP A-2 – ASSEMBLY	ASSEMBLY
SEPERATED MIXED USE. OCCUPANCY GROUPS ARE LISTED ABOVE. 1HR SEPARATION REQUIRED.	

CONSTRUCTION TYPE

IBC	LSC
IIA (TABLE 601)	II (111) (CH 18, NFPA 220)

ALLOWABLE HEIGHT

IBC 504 (LSC 18.1.6)

OCCUPANCY GROUP I-2, C2 CONSTRUCTION TYPE **IIA**	IBC	LSC
ALLOWABLE HEIGHT (STORIES):	3	3
ALLOWABLE HEIGHT (FEET):	85	

ALLOWABLE AREA

IBC 506

OCCUPANCY GROUP I-2, C2	CONSTRUCTION TYPE IIA
ALLOWABLE AREA (TABULAR)*:	45,000 SF
ALLOWABLE AREA (TABULARV - NS):	15,000 SF
FRONTAGE INCREASE FACTOR:	0.75
BUILDING PERIMETER:	1,000'
ALLOWABLE AREA (IBC FORMULA 5-3):	56,250 SF

*BASED ON SPRINKLERED MULTI-STORY BUILDING

FIRE RESISTANCE

IBC 601

BUILDING ELEMENT	HOURS
PRIMARY STRUCTURAL FRAME	1
NONBEARING WALLS AND PARTITIONS	
EXTERIOR	0
INTERIOR	0
FLOOR CONSTRUCTION	1
ROOF CONSTRUCTION	1

SPRINKLER PROTECTION

FULLY SPRINKLERED IN ACCORDANCE WITH NFPA 13.

FIRE AND SMOKE PROTECTION FEATURES

SMOKE PARTITIONS	
IBC: 710	**LSC**: 8.4, 18.3.6.3

SMOKE BARRIERS	
IBC: 709	**LSC**: 8.5, 18.3.7.3
NEW SMOKE BARRIERS SHALL BE BUILT TO A 1 HR FIRE RATING WITH OPENING PROTECTIVES AS REQUIRED BY IBC TABLE 716.1(2) AND LSC TABLE 8.3.4.2. EXISTING SMOKE BARRIERS SHALL HAVE A MINIMUM 1/2 HR FIRE RATING WITH OPENING PROTECTIVES LSC TABLE 8.3.4.2.	

FIRE BARRIERS	
IBC: 707	**LSC**: 8.3
NEW FIRE BARRIERS SHALL BE BUILT TO FIRE RATINGS AS INDICATED ON THE LIFE SAFETY PLAN WITH OPENING PROTECTIVES AS REQUIRED BY IBC TABLE 716.1(2) AND LSC TABLE 8.3.4.2. WHERE WALLS ARE COMBINATION FIRE/SMOKE BARRIERS THE REQUIREMENTS FOR BOTH ASSEMBLY TYPES SHALL APPLY.	

INTERIOR FINISHES

IBC	LSC
AS INDICATED (TABLE 803.13)	8.4, 18.3.6.3

NOTE: ONLY MOST STRINGENT REQUIREMENTS ARE SHOWN IN TABLE BELOW

OCCUPANCY GROUP	EXIT STAIRWAYS INTERIOR EXIT RAMPS, EXIT PASSAGEWAYS	CORRIDORS AND ENCLOSURE FOR EXIT ACCESS STAIRWAYS AND EXIT ACCESS RAMPS	ROOMS AND ENCLOSED SPACES
IBC GROUP I-2, CONDITION 2	B	B	C

FIRE ALARM

DEFFERED SUBMITTAL

OCCUPANT LOAD

SEE OCCUPANCY LOAD CALCULATION TABLE ON THIS SHEET

PLUMBING FIXTURE CALCULATION

SEE PLUMBING FIXTURE CALCULATION TABLE ON THIS SHEET.

MEANS OF EGRESS

NOTE: ONLY THE MOST RESTRICTIVE TRAVEL DISTANCE BETWEEN THE IBC AND LSC ARE GIVEN.

MEANS OF EGRESS	IBC	LSC
EXIT ACCESS TRAVEL DISTANCE	IBC: 200'-0" (TABLE 1017.2)	LSC: 200'-0" (18.2.6.2)
COMMON PATH OF TRAVEL	IBC: 75'-0", MAX 10 OCC. (TABLE 1006.2.1)	LSC: 100'-0" (18.2.5.3)
DEAD ENDS	IBC: 20'-0" (1020.4)	LSC: 30'-0" (18.5.2)
SMOKE COMPARTMENT EXITS	IBC: 200'-0" (407.5.2)	LSC: 200'-0" (18.3.7.1(4)

ENERGY CODE

CLIMATE ZONE (IECC TABLE C301.1)	
6A	COLD HUMID

ENVELOPE REQUIREMENTS (IECC TABLE C402.1.3)	
ROOF (INSULATION ENTIRELY ABOVE DECK):	R-30 CI
MASS WALL – ABOVE GRADE :	R-13.3 CI
METL -FRAMED WALLS – ABOVE GRADE:	R-13 + R12.5 CI
MASS WALL – BELOW GRADE:	R-10 CI
UNHEATED SLABS:	R-20 FOR 24" BELOW
HEATED SLABS:	R-15 FOR 36" BELOW + R-5 FULL SLAB

OCCUPANCY LOAD CALCULATIONS

CLASSIFICATIONS			OCCUPANTS			
OCC GROUP	FUNCTIONAL AREA	AREA	LOAD FACTOR (TABULAR)	LOAD FACTOR - CALC	OCC LOAD	COMMENTS
FIRST FLOOR						
A-2	ASSEMBLY - UNCONCENTRATED (TABLES AND CHAIRS)	2589 SF	15 SF	15 SF	173	
A-2	KITCHEN (COMMERCIAL)	2534 SF	200 SF	200 SF	13	
BUSINESS	BUSINESS	8583 SF	150 SF	150 SF	44	
I-2, C2	ACCESSORY STORAGE AREAS, MECHANICAL EQUIPMENT ROOM	2453 SF	300 SF	300 SF	8	
I-2, C2	INSTITUTIONAL - INPATIENT AREAS	10938 SF	240 SF	240 SF	55	
I-2, C2	MERCANTILE - STORAGE, STOCK, SHIPPING AREAS	337 SF	300 SF	300 SF	1	
		27432 SF				
SECOND FLOOR						
BUSINESS	BUSINESS	1002 SF	150 SF	150 SF	82	
I-2, C2	ACCESSORY STORAGE AREAS, MECHANICAL EQUIPMENT ROOM	721 SF	300 SF	300 SF	3	
I-2, C2	EXERCISE ROOMS	2232 SF	50 SF	50 SF	43	
I-2, C2	INSTITUTIONAL - INPATIENT AREAS	19355 SF	240 SF	240 SF	82	
		23310 SF				
		50742 SF				

PLUMBING FIXTURE CALCULATIONS - FIRST FLOOR

NO.	CATEGORY	DESCRIPTION	OCCUPANTS TOTAL	MALE %	MALE OCC	FEMALE %	FEMALE OCC	WATER CLOSETS (URINALS SEE SECTION 424.2 OF THE... MALE	WATER CLOSETS FEMALE	LAVATORIES MALE	LAVATORIES FEMALE	BATHTUBS/SHOWERS	DRINKING FOUNTAINS (SEE SECTION 410 OF THE INTERNATIO...	OTHER
1	ASSEMBLY	RESTAURANTS, BANQUET HALLS AND FOOD COURTS	173	50%	87	50%	87	1.16	1.16	.435	.435		.346	1 SERVICE SINK
2	BUSINESS	BUILDINGS FOR THE TRANSACTION OF BUSINESS, PROFESSIONAL SERVICES, OTHER SERVICES INVOLVING MERCHANDISE, OFFICE BUILDINGS, BANKS, LIGHT INDUSTRIAL, AMBULATORY CARE AND SIMILAR USES	57	50%	29	50%	29	1.16	1.16	.725	.725	-	.57	1 SERVICE SINK
5	INSTITUTIONAL	MEDICAL CARE RECIPIENTS IN HOSPITALS AND NURSING HOMES	20	50%	10	50%	10	10	10	10	10	1.3	.2	1 SERVICE SINK
		EMPLOYEES IN HOSPITALS AND NURSING HOMES	15	50%	8	50%	8	.32	.32	.228	.228		.15	-
		VISITORS IN HOSPITALS AND NURSING HOMES	20	50%	10	50%	10	.133	.133	.1	.1	-	.2	-
8	STORAGE	STRUCTURES FOR THE STORAGE OF GOODS, WARE-HOUSES, STOREHOUSES AND FREIGHT DEPOTS, LOW AND MODERATE HAZARD	9	50%	5	50%	5	.05	.05	.05	.05	N/A	.009	1 SERVICE SINK
		TOTALS (REQUIRED)	**293**		**149**		**149**	**13**	**13**	**12**	**12**	**2**	**2**	**1**
		TOTALS (PROVIDED)						**16**	**16**	**24**	**24**	**20**	**2**	**1**

PLUMBING FIXTURE CALCULATIONS - SECOND FLOOR

NO.	CATEGORY	DESCRIPTION	OCCUPANTS TOTAL	MALE %	MALE OCC	FEMALE %	FEMALE OCC	WATER CLOSETS (URINALS SEE SECTION 424.2 OF THE... MALE	WATER CLOSETS FEMALE	LAVATORIES MALE	LAVATORIES FEMALE	BATHTUBS/SHOWERS	DRINKING FOUNTAINS (SEE SECTION 410 OF THE INTERNATIO...	OTHER
1	ASSEMBLY	AUDITORIUMS WITHOUT PERMANENT SEATING, ART GALLERIES, EXHIBITION HALLS, MUSEUMS, LECTURE HALLS, LIBRARIES, ARCADES AND GYMNASIUMS	66	50	33	50	33	.44	.44	.165	.165		.12	1 SERVICE SINK
5	INSTITUTIONAL	MEDICAL CARE RECIPIENTS IN HOSPITALS AND NURSING HOMES	30	50%	15	50%	15	1 PER ROOM = 30		1 PER ROOM		1 PER 15	1 PER 100	1 SERVICE SINK
		EMPLOYEES IN HOSPITALS AND NURSING HOMES	22	50%	11	50%	11	.44	.44	3.14	3.14	-	.11	-
		VISITORS IN HOSPITALS AND NURSING HOMES	30	50%	15	50%	15	.2	.2	.15	.15	-	.11	-
8	STORAGE	STRUCTURES FOR THE STORAGE OF GOODS, WARE-HOUSES, STOREHOUSES AND FREIGHT DEPOTS, LOW AND MODERATE HAZARD	3	50%	2	50%	2	.2	.2	.2	.2	N/A	.003	1 SERVICE SINK
		TOTALS (REQUIRED)	**151**		**76**		**76**	**17**	**17**	**16**	**16**	**2**	**1**	**1**
		TOTALS (PROVIDED)						**17**	**18**	**31**	**32**	**16**	**2**	**1**

LIFE SAFETY LEGEND

- 2 HOUR FIRE BARRIER (90-MIN OPENING PROTECTIVES UNO)
- 1 HOUR FIRE BARRIER (45-MIN OPENING PROTECTIVES UNO)
- 1 HOUR SMOKE BARRIER (20-MIN OPENING PROTECTIVES UNO)
- SMOKE PARTITION, LIMIT THE TRANSFER OF SMOKE
- EXIT/EXIT DISCHARGE — CLEAR WIDTH IN INCHES, OCCUPANT CAPACITY (# / #)
- EXIT ACCESS — CLEAR WIDTH IN INCHES, OCCUPANT CAPACITY (# / #)
- HORIZONTAL EXIT — CLEAR WIDTH IN INCHES, OCCUPANT CAPACITY (HE## / ##)
- COMMON PATH TRAVEL DISTANCE (CPTD), EXIT ACCESS (EXA), TRAVEL DISTANCE TO EXIT (TDX)
- HAZARDOUS AREAS
- SUITE
- FIRE-RATED SHAFT / CHUTE / HOISTWAY, RATINGS VARY - SEE PLAN
- (X) OCCUPANT LOAD IN A GIVEN ROOM OR AREA
- FEC — FIRE EXTINGUISHER CABINET
- FE — FIRE EXTINGUISHER
- SC-XX — SMOKE COMPARTMENT MARK
- STE-X — SUITE MARK

EAPC

Architecture | Engineering | Interior Design | Industrial

TELEPHONE 701.258.3116

116 W. Main Ave., Suite A, Bismarck ND 58501

www.eapc.net

CONSULTANTS

CLIENT

VIBRA HOSPITALS OF THE CENTRAL DAKOTAS

PROJECT DESCRIPTION

BISMARCK REHABILITATION HOSPITAL

CITY BISMARCK

STATE NORTH DAKOTA

ISSUE DATES

MARK	DESCRIPTION	DATE
2	ADDENDUM #1	02/09/2025
1	ISSUED FOR BIDDING	01/29/2026

PROJECT NO: 20251200

DRAWN BY: JB, MG

CHECKED BY: DE, DA, BD

COPYRIGHT:
All plans, specifications, computer files, field data, notes and other documents and instruments prepared by EAPC as instruments of service shall remain the property of EAPC. EAPC shall retain all common law, statutory and other reserved rights, including the copyright there to.

STAMP

I hereby certify that this plan, specification, or report was prepared by me or under my direct supervision and that I am a duly Registered Architect under the laws of the State of North Dakota.

Signature: [signature]

Date: 02/09/2026 REG. NO. : 1718

Drawing Title

LIFE SAFEY ANALYSIS

G100

FOUNDATION WALL SCHEDULE

MARK	WIDTH	MATERIAL	REINFORCING VERTICAL	REINFORCING HORIZONTAL	REMARKS
W-1	8"	CONC	#5 @ 18" O/C, CENTERED	#5 @ 18" O/C, CENTERED	
W-2	1'-2"	CONC	#5 @ 18" O/C, EA FACE	#5 @ 12" O/C, EA FACE	

CONTINUOUS FOOTING SCHEDULE

MARK	FOOTING SIZE WIDTH	FOOTING SIZE THICKNESS	REINFORCING LONGITUDINAL	REINFORCING TRANSVERSE	REMARKS
WF-1	1'-4"	12"	(2) #5 CONT	--	
WF-2	2'-0"	12"	(2) #5 CONT	--	
WF-4	4'-6"	12"	(5) #5 CONT TOP & BTM	--	
WF-5	3'-0"	12"	(3) #5 CONT TOP & BTM		

SPREAD FOOTING SCHEDULE

MARK	FOOTING SIZE	FOOTING THICKNESS	REINFORCING	REMARKS
F-1	5'-0" x 5'-0"	12"	(5) #5 BTM, EA WAY	
F-2	5'-0" x 5'-0"	15"	(5) #5 TOP & BTM, EA WAY	
F-3	6'-0" x 6'-0"	12"	(6) #5 BTM, EA WAY	
F-5	7'-0" x 7'-0"	15"	(8) #6 TOP & BTM, EA WAY	
F-6	8'-0" x 8'-0"	15"	(8) #6 TOP & BTM, EA WAY	
F-7	8'-0" x 8'-0"	12"	(8) #6 BTM, EA WAY	
F-8	8'-6" x 8'-6"	12"	(9) #6 BTM, EA WAY	
F-9	9'-0" x 9'-0"	15"	(9) #6 BTM, EA WAY	
F-10	9'-0" x 9'-0"	15"	(9) #6 TOP & BTM, EA WAY	
F-10.5	10'-0" x 10'-0"	15"	(10) #7 BTM, EA WAY	
F-11	10'-0" x 10'-0"	15"	(10) #7 TOP & BTM, EA WAY	
F-12	11'-0" x 11'-0"	15"	(11) #7 TOP & BTM, EA WAY	
F-13	12'-0" x 12'-0"	15"	(12) #7 TOP & BTM, EA WAY	

CONCRETE PIER SCHEDULE

MARK	PIER SIZE	REINFORCING VERTICAL	REINFORCING TIE SIZE/SPACING	REMARKS
P-1	24" x 24"	(8) #6	(3) #3 TOP 5" REMAINDER @ 12" O/C	
P-2	30" x 30"	(12) #6	(3) #3 TOP 5" REMAINDER @ 12" O/C	
P-3	30" x 42"	(10) #8	(3) #3 TOP 5" REMAINDER @ 12" O/C	
P-4	36" x 48"	(12) #8	(3) #3 TOP 5" REMAINDER @ 12" O/C	
P-5	16" x 16"	(4) #6	(3) #3 TOP 5" REMAINDER @ 12" O/C	

NOTES:
1. CIP CONCRETE PIER CAST MONOLITHICALLY WITH FOUNDATION WALL WHERE APPLICABLE.
2. TYPICAL HORIZONTAL WALL REINFORCING TO RUN CONTINUOUS THROUGH PIER WHERE APPLICABLE.
3. PLACE PIER SUCH THAT COLUMN ANCHOR RODS & REINF ARE CONTAINED WITHIN PIER TIES.
4. BLOCKOUT FOUNDATION WALL AS REQUIRED FOR INSTALLATION OF STEEL BASE PLATE/COLUMN CONTRACTOR TO COORDINATE LAYOUTS. PROVIDE 1" MIN CLR AROUND ALL SIDES OF BASEPLATES THAT ARE WITHIN FOUNDATION WALL SPACE, UON
5. PROVIDE SHEAR LUG BLOCKOUT AT TOP OF PIER AS SHOWN IN DETAIL, AS REQUIRED. PROVIDE 1 1/4" CLEAR BETWEEN BLOCKOUT AND SHEAR LUG AT ALL SIDES. UON.

STEEL COLUMN SCHEDULE

MARK	SIZE	BASEPLATE TYPE	BASEPLATE L	BASEPLATE W	BASEPLATE T	ANCHOR RODS NUM.	ANCHOR RODS DIA.	ANCHOR RODS EMBED	ANCHOR RODS GRADE	REMARKS
C-1	HSS5x5x3/8	D	11"	11"	3/4"	4	3/4"	18"	36 KSI	
C-2	HSS5x5x3/8	C	20"	20"	2"	4	1 1/2"	28"	36 KSI	12" WIDE x 10" DEEP x 1 1/2" THICK SHEAR LUG
C-3	HSS6X6X3/8	D	11"	11"	3/4"	4	3/4"	18"	36 KSI	
C-4	HSS6X6X3/8	C	20"	20"	2"	4	1 1/2"	28"	36 KSI	12" WIDE x 10" DEEP x 1 1/2" THICK SHEAR LUG
C-5	HSS6X6X1/2	D	12"	12"	3/4"	4	3/4"	18"	36 KSI	
C-6	HSS6X6X1/2	C	20"	20"	2"	4	1 1/2"	28"	36 KSI	12" WIDE x 10" DEEP x 1 1/2" THICK SHEAR LUG
C-7	HSS6x6x5/8	D	12"	12"	1"	4	3/4"	18"	36 KSI	
C-8	W12x65	A	24"	16"	2"	4	1 1/2"	28"	36 KSI	12" WIDE x 10" DEEP x 1" THICK SHEAR LUG
C-9	W12x65	B	24"	22"	2"	4	1 1/2"	28"	36 KSI	12" WIDE x 10" DEEP x 1 1/2" THICK SHEAR LUG
C-10	W12x96	A	16"	24"	2"	4	1 1/2"	28"	36 KSI	12" WIDE x 10" DEEP x 1" THICK SHEAR LUG
C-11	HSS8x8x1/2	D	14"	14"	1"	4	3/4"	18"	36 KSI	
C-12	HSS4x4x3/8"	E	11"	6"	3/4"	4	3/4"	18"	36 KSI	
C-13	HSS5x5x1/4	F	12"	6"	3/4"	4	3/4"	18"	36 KSI	
C-14	W14x68	A	24"	16"	2"	4	1 1/2"	28"	36 KSI	12" WIDE x 10" DEEP x 1" THICK SHEAR LUG
C-15	HSS4x4x1/4	G	10"	8"	3/4"	4	3/4"	8"	36 KSI	
C-16	W12x65	H	20"	Bf	3/4"	4	1"	N/A	A325N	5/8" THICK STIFFENERS IN WEB SPACE OF SUPPORTING BEAM
C-17	HSS4x4x3/8"	I	10 1/2"	Bf	3/4"	4	3/4"	N/A	A325N	5/8" THICK STIFFENERS IN WEB SPACE OF SUPPORTING BEAM

NOTES:
1. SEE DETAILS 1 & 2/S003 FOR BASE PLATE & ANCHOR ROD INFORMATION.
2. PROVIDE 2"x3/8"x2" PLATE WASHERS AT ALL ANCHOR RODS LESS THAN 1" DIAMETER & 3"x3/8"x3" PLATE WASHERS AT ALL ANCHOR RODS GREATER THAN OR EQUAL TO 1" DIAMETER, (NOT REQUIRED AT A325 BOLTS).
3. PROVIDE STANDARD DIAMETER BOLTS AT BASE PLATES WITH A325 BOLTS.
4. REFER TO FOUNDATION PLANS AND FRAMING ELEVATIONS FOR COLUMN ORIENTATION.

BOLTED MOMENT END PLATE CONNECTION SCHEDULE

MARK	PLATE THICKNESS	BOLT DIA	BOLT QTY	FILLET WELDS (BOTH SIDES) FLANGE	FILLET WELDS (BOTH SIDES) WEB	REMARKS
MEP-1	3/4"	3/4"	8	1/4"	1/4"	@ GRID LOCATION P.1-1 & I-11, PROVIDE COL WEB STIFFENERS (TOP & BOT) (MATCH FLANGE THICKNESS)
MEP-2	3/4"	3/4"	10	5/16"	1/4"	@ SIM ADD 1/2" THICK COLUMN WEB DOUBLER PLATE (ONE SIDE OF COL, FILLET WELDED 3/16")
MEP-3	3/4"	3/4"	6	5/16"	1/4"	COL WEB STIFFENERS (TOP & BTM) (MATCH BEAM FLANGE THICKNESS)
MEP-4	3/4"	3/4"	6	1/4"	1/4"	@ SIM ADD 1/2" THICK COL WEB DOUBLER PLATE (ONE SIDE OF COL, FILLET WELDED 3/16") @ GRID LOCATION C.1-7, PROVIDE COL WEB STIFFENERS (TOP & BOT) (MATCH FLANGE THICKNESS)
MEP-5	1"	1"	14	7/16"	5/16"	1/2" THICK COLUMN WEB DOUBLER PLATE (ONE SIDE OF COL, FILLET WELDED 3/16")
MEP-6	3/4"	1"	12	5/16"	1/4"	
MEP-7	3/4"	1"	6	1/4"	1/4"	1/2" THICK COLUMN WEB DOUBLER PLATE (ONE SIDE OF COL, FILLET WELDED 3/16") @ SIM
MEP-8	3/4"	1"	8	1/4"	1/4"	
MEP-9	-	-	-	-	-	NOT USED
MEP-10	1"	1"	8	5/16"	1/4"	@ SIM ADD COL WEB STIFFENERS (TOP & BTM) (MATCH FLANGE THICKNESS)
MEP-11	3/4"	1"	10	5/16"	1/4"	

1. SEE DETAIL 12 & 15/S701 FOR LOCATIONS OF DOUBLER PLATE AND/OR COLUMN STIFFENERS
2. SEE DETAIL 4/S003 FOR BOLTED MOMENT END PLATE LAYOUT
3. PROVIDE STANDARD BOLTS AT MOMENT END PLATES WITH A325 BOLTS

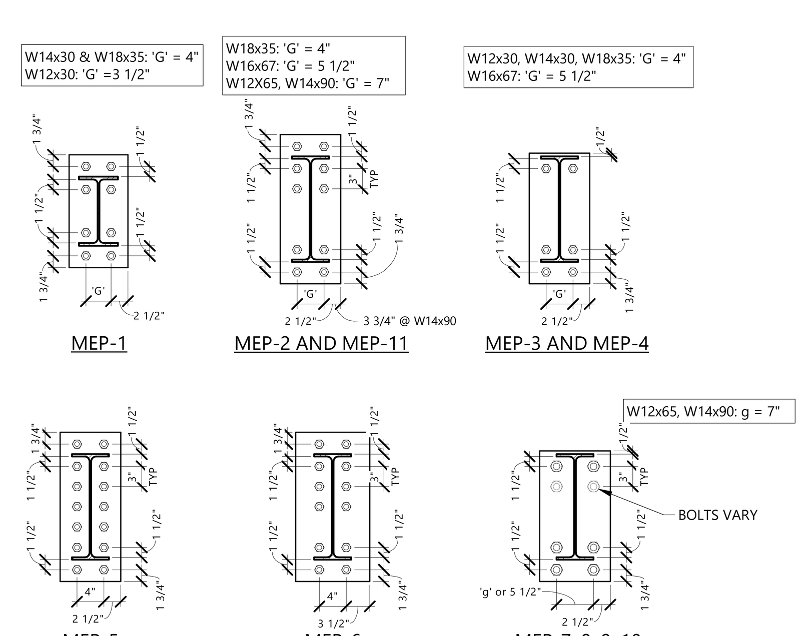

4 S003 BOLTED MEP LAYOUTS
3/4" = 1'-0"

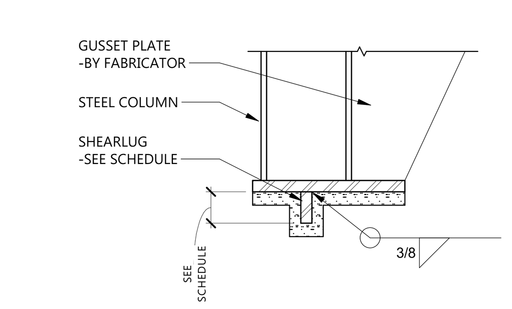

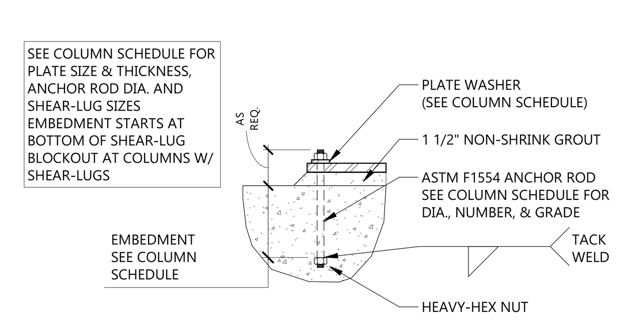

2 S003 ANCHOR ROD/SHEAR LUG
1" = 1'-0"

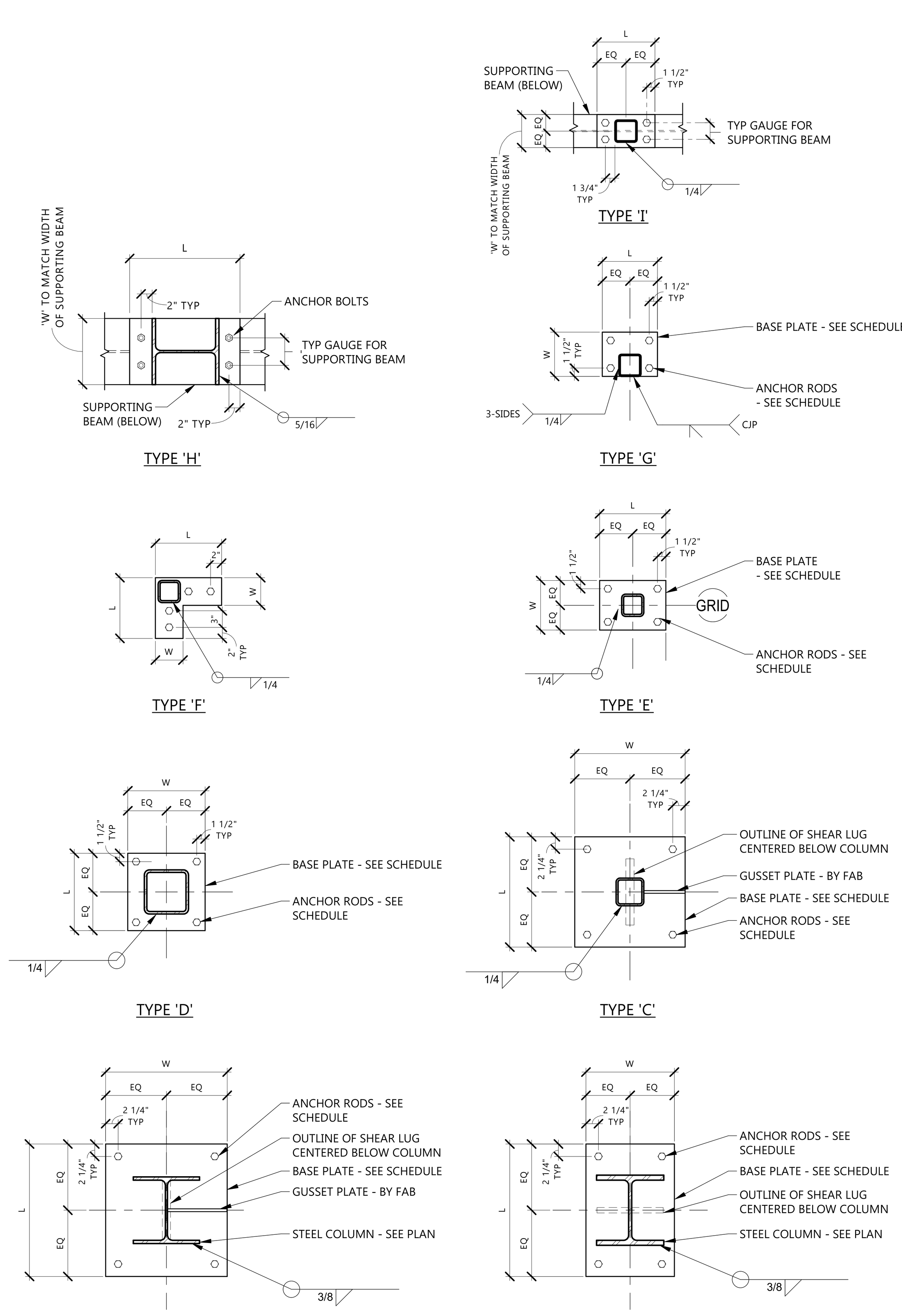

1 S003 BASE PLATE LAYOUTS
3/4" = 1'-0"

A
AB	ANCHOR BOLT
ADH	ADHESIVE
ADJC	ADJACENT
AFF	ABOVE FINISHED FLOOR
AL	ALUMINUM
ALT	ALTERNATE
APPROX	APPROXIMATE

B
B/F	BOTH FACES
BBE	BEAM BEARING ELEVATION
BFE	BOTTOM OF FOOTING
BLDG	BUILDING
BLK(G)	BLOCK(ING)
BM	BEAM
BP	BASE PLATE
BRDG	BRIDG(E) (ING)
BRG	BEARING
BRK	BRICK
BTM	BOTTOM
BTOB	BACK-TO-BACK

C
C	AMERICAN STANDARD CHANNEL
C/C	CENTER TO CENTER
CAP	CAPACITY
CF	CUBIC (FOOT) (FEET)
CHAM	CHAMFER
CIP	CAST-IN-PLACE
CJ	CONTROL/CONSTRUCTION JOINT
CJP	COMPLETE JOINT PENETRATION
CL	CENTERLINE
CLR	CLEAR
CMU	CONCRETE MASONRY UNIT
COL	COLUMN
COMP	COMPOSITE
CONC	CONCRETE
CONN	CONNECT(ION)
CONST	CONSTRUCTION
CONT	CONTINU(E) (OUS) (ATION)
CONTR	CONTRACTOR
COORD	COORDINATE

D
DBE	DECK BEARING ELEVATION
DBL	DOUBLE
DE	DECK EDGE
DETL	DETAIL
DHP	DRILLED HELICAL PILE
DIA	DIAMETER
DIAG	DIAGONAL
DIM	DIMENSION
DL	DEAD LOAD
DR	DOOR
DT	DOUBLE TEE/DRAIN TILE
DWG(S)	DRAWING(S)
DWL	DOWEL (REBAR)

E
EA	EACH
EF	EACH FACE
EJ	EXPANSION JOINT
EL	ELEVATION
EOR	ENIGNEER OF RECORD
EQ	EQUAL
EQP	EQUIPMENT
EW	EACH WAY
EX	EXISTING
EXP	EXPOSED/EXPANSION
EXT	EXTERIOR

F
FB	FACE BRICK
FD	FLOOR DRAIN
FFE	FINISHED FLOOR ELEVATION
FIN	FINISH(ED)
FNDN/ FDN	FOUNDATION
FS	FAR SIDE
FTG	FOOTING

G
GA	GAUGE
GALV	GALVANIZED
GLB	GLUE-LAMINATED BEAM
GR	GRADE

H
HC	HOLLOW CORE
HEX	HEXAGONAL
HORIZ	HORIZONTAL
HSS	HOLLOW STRUCTURAL SECTION
HWS	HEADED WELDED STUD

I
I/D	INSIDE DIAMETER
I/F	INSIDE FACE
INFO	INFORMATION
INS	INSULATION

J
JBE	JOIST BEARING ELEVATION
JST	JOIST
JT	JOINT

K
k	KIP
KCJ	KEYED CONTROL JOINT
KLF	KIP PER LINEAR FOOT
KO	KNOCK OUT
KSF	KIP PER SQUARE FOOT

L
L	ANGLE
LB	POUND
LIN	LINEAR
LL	LIVE LOAD
LLH	LONG LEG HORIZONTAL
LLV	LONG LEG VERTICAL
LONG	LONGITUDINAL(LY)
LTL	LINTEL
LW	LIGHT WEIGHT

M
MAX	MAXIMUM
MC	MISCELLANEOUS CHANNEL
MECH	MECHANICAL
MEZZ	MEZZANINE
MFR	MANUFACTURER
MIN	MINIMUM
MISC	MISCELLANEOUS
MTL	METAL

N
NIC	NOT IN CONTRACT
NO	NUMBER
NOM	NOMINAL
NS	NEAR SIDE
NSG	NON-SHRINK GROUT
NTS	NOT TO SCALE
NW	NORMAL WEIGHT

O
O/C	ON CENTER
O/D	OUTSIDE DIAMETER
O/F	OUTSIDE FACE
OH	OVERHEAD
OPG	OPENING
OPP	OPPOSITE

P
PC	PRECAST
PJP	PARTIAL JOINT PENETRATION
PL	PLATE
PLF	POUNDS PER LINEAL FOOT
PLWD	PLYWOOD
PNL	PANEL
PROJ	PROJECT(ION) (OR)
PSF	POUNDS PER SQUARE FOOT
PSI	POUNDS PER SQUARE INCH
PT	POST TENSION(ED) (ING)

Q
QTY	QUANTITY

R
R/RAD	RADIUS
RD	ROOF DRAIN
REBAR	REINFORCING BAR
REF	REFER(ENCE)
REINF	REINFORC(E) (ED) (ING) (EMENT)
REM	REMOVABLE
REQD	REQUIRED
RO	ROUGH OPENING

S
S	SHAPE
SC	SOLID CORE
SCHED	SCHEDULE
SF	SQUARE FOOT
SIM	SIMILAR
SL	SNOW LOAD
SLV	SLEEVE
SOG	SLAB-ON-GRADE
SPEC(S)	SPECIFICATION(S)
SQ	SQUARE
SS	STAINLESS STEEL
STD	STANDARD
STIF	STIFFENER
STL	STEEL
STRUCT	STRUCTUR(E) (AL)
SYM	SYMMETR(Y) (ICAL)

T
T&B	TOP AND BOTTOM
TBE	TOP OF BEAM ELEVATION
TCE	TOP OF COLUMN ELEVATION
TDE	TOP OF DECK ELEVATION
TEMP	TEMPERATURE/TEMPORARY
TFE	TOP OF FOOTING ELEVATION
TFF	TOP OF FINISHED FLOOR
TGE	TOP OF GRATING ELEVATION
TJE	TOP OF JOIST ELEVATION
TLE	TOP OF LEDGE ELEVATION
TME	TOP OF MASONRY ELEVATION
TO	TOP OF
TPE	TOP OF PIER ELEVATION
TRANS	TRANSVERSE
TSE	TOP OF SLAB ELEVATION
TWE	TOP OF WALL ELEVATION
TYP	TYPICAL

U
UNO	UNLESS NOTED OTHERWISE
UON	UNLESS OTHERWISE NOTED

V
VAR	VARIES
VB	VAPOR BARRIER
VERT	VERTICAL
VIF	VERIFY IN FIELD

W
W	WIDE FLANGE SHAPE
W/	WITH
W/O	WITHOUT
WD	WOOD
WL	WIND LOAD
WP	WORK(ING) POINT
WT	WEIGHT/STRUCTURAL TEE
WWF	WELDED WIRE FABRIC
WWM	WELDED WIRE MESH

SPECIAL SYMBOLS
#	POUND
/	PER
@	AT
L	ANGLE
°	DEGREE
Ø	DIAMETER
℄	CENTERLINE

STEEL FRAMING LEGEND

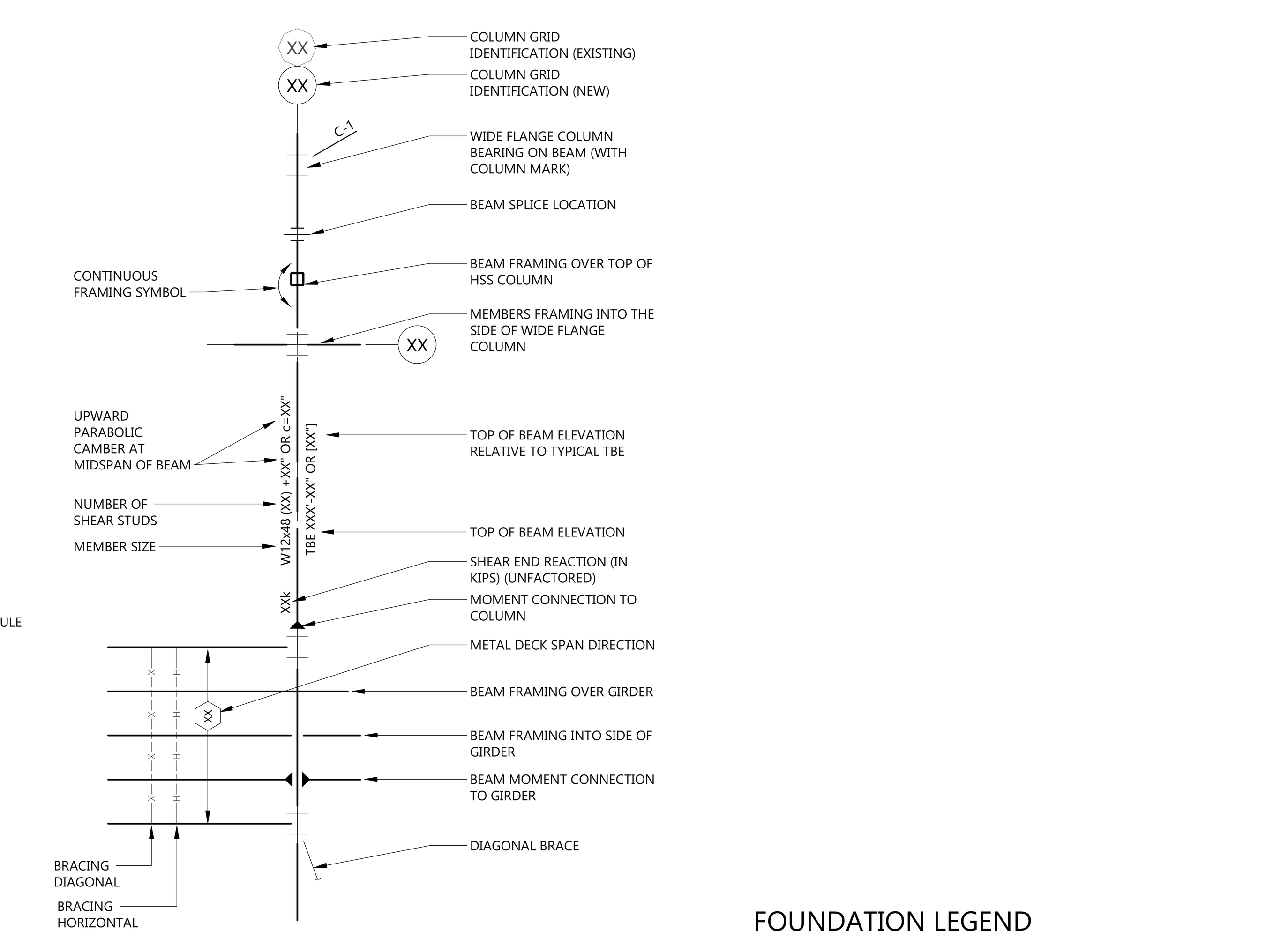

STRUCTURAL SLAB LEGEND

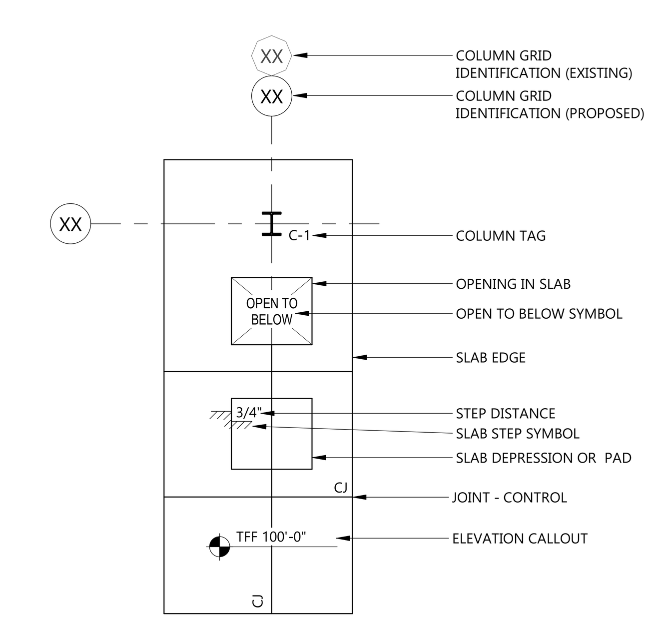

FOUNDATION LEGEND

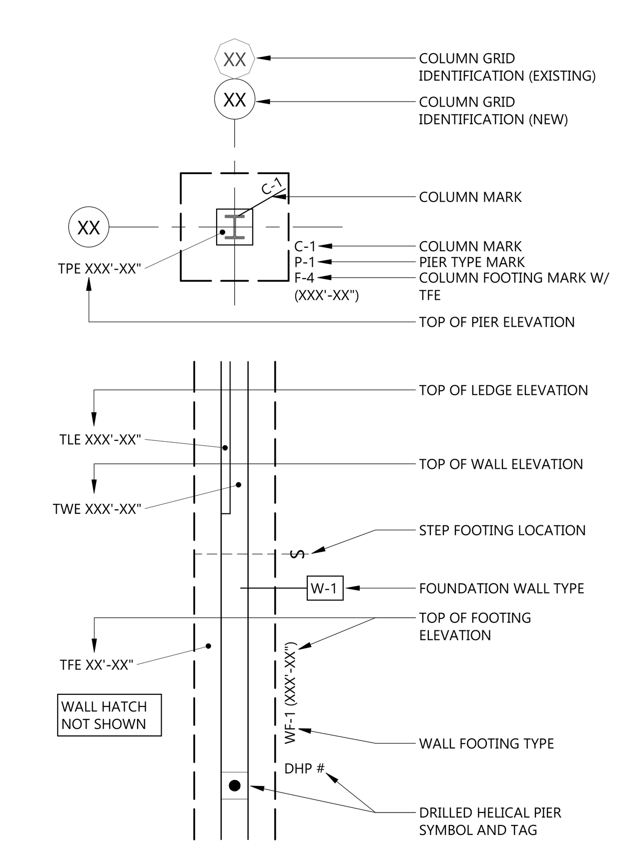

EAPC
Architecture | Engineering
Interior Design | Industrial
TELEPHONE 701.258.3116
116 W. Main Ave., Suite A, Bismarck ND 58501
www.eapc.net

CONSULTANTS

CLIENT
VIBRA HOSPITALS OF THE CENTRAL DAKOTAS

PROJECT DESCRIPTION
BISMARCK REHABILITATION HOSPITAL

CITY BISMARCK
STATE NORTH DAKOTA

ISSUE DATES

MARK	DESCRIPTION	DATE
2	ADDENDUM #1	02/09/2026
1	ISSUED FOR BIDDING	01/28/2026

PROJECT NO: 20251200
DRAWN BY: SLR/TLR
CHECKED BY: JPM/SJW

COPYRIGHT:
All plans, specifications, computer files, field data, notes and other documents and instruments prepared by EAPC as instruments of service shall remain the property of EAPC. EAPC shall retain all common law, statutory and other reserved rights, including the copyright there to.

STAMP

REGISTERED PROFESSIONAL ENGINEER
SAMUEL J. WILKE
PE-6697
DATE 01-28-2026
NORTH DAKOTA

Drawing Title
STRUCTURAL LEGENDS, SCHEDULES, AND ABBREVIATIONS

S003

Revit Version: 2025
Plot Date: 2/6/2026 2:56:43 PM

GENERAL NOTES

1. COORDINATE AND VERIFY ALL STOOP AND OPENING LOCATIONS WITH ARCH.
2. PROVIDE COLUMN ISOLATION JOINTS AT ALL COLUMN LOCATIONS.
3. PROVIDED SLAB CONTROL JOINTS PER S001 GENERAL STRUCTURAL NOTES.
4. SEE 18/S601 FOR FOOTING STEP DETAIL

TFE=95'-0" (UON)
TFF=100'-0" (UON)
TWE=100'-0" (UON)
TPE=99'-4" (UON)
TWE=99'-4" @ STOOPS & DOOR OPENINGS (UON)

KEYNOTE LEGEND:

< < < INDICATES KEYNOTE ON PLAN

01 4" THICK CONCRETE SLAB-ON-GRADE OVER 10 MIL VAPOR BARRIER OVER 6" COMPACTED SAND DRAINAGE COURSE. REINFORCE SLAB W/ #4 @ 18" O/C EACH WAY, CENTERED IN SLAB

02 THICKEN FOUNDATION WALL 4" WITHIN STOOP WALLS

03 12" THICK x 48" WIDE x STAIR WIDTH THICKENED SLAB @ STAIR LANDING W/ (3) #5 BARS CONT @ BTM -SEE 25/S601

04 6" THICK CONCRETE SLAB-ON-GRADE OVER 10 MIL VAPOR BARRIER OVER 6" COMPACTED SAND DRAINAGE COURSE. REINFORCE SLAB W/ #4 @ 12" O/C EACH WAY, CENTERED IN SLAB

05 12" THICK CONCRETE MAT FOUNDATION W/ #5 @ 12" O/C EACH WAY TOP & BTM. CONTRACTOR TO VERIFY PIT DIMENSIONS & DEPTH W/ ELEVATOR SUPPLIER PRIOR TO CONSTRUCTION

06 NOT USED

07 STAIRS BY SPEC- SEE ARCH BID PACKAGE

08 8" CIP CONC WALL BELOW CFS STUD WALL, REINFORCED W/ (1) #5 @ 12" O/C EA WAY -VERIFY W/ ELEVATOR SUPPLIER PRIOR TO CONSTRUCTION

09 12" THICK CONCRETE SLAB REINFORCED W/ #5 @ 12" O/C, TOP AND BOTTOM, EACH WAY (2" CLR @ TOP & 3" CLR @ BTM) & #5 x 3'-10" BENT BAR DOWELS @ 12" O/C (18" HORIZ LEG & 28" VERT LEG) ALL SIDES & EXTENDED TO TOP LAYER OF REINF. POUR SLAB OVER TOP OF FNDN WALL & PROVIDE 6" THICK VOID FORM AT UNDERSIDE OF SLAB & 3/4" CHAMFER AT PERIMETER EDGES. COORDINATE FINAL LOCATION AND ELEVATION W/ ELECTRICAL, MECHANICAL, AND CIVIL

10 6 STD STEEL FENCE POST FILLED W/ CONC (ROUNDED AT TOP). ENCASED IN 16" Ø CONC PIER (EMBED 5'-0" MIN BELOW GRADE)

11 6" THICK CONCRETE SLAB ON GRADE OVER 6" DRAINAGE COURSE. REINFORCE W/ #4 @ 12" O/C EACH WAY CENTERED IN SLAB (SLOPE SLAB AND COORDINATE W/ CIVIL)

12 8" CMU WALL W/ #5 VERT @ 48" O/C @ GRADE ELEV (COORDINATE W/ CIVIL), VERIFY FINAL HEIGHT W/ ARCH

13 TOP OF FOOTING TO BE 7'-0" MIN BELOW FINAL GRADE. COORDINATE W/ CIVIL

14 8" CMU BOND BEAM W/ (2) #4 BARS AT BOTTOM (2" CLR) AND (2) #4 BARS AT TOP (2" CLR) - (4) TOTAL BARS OVER OPENING (VERIFY OPNG HEIGHT AND LOCATION W/ ARCH)

15 BOLLARD -SEE 24/S601 (SIM) 2

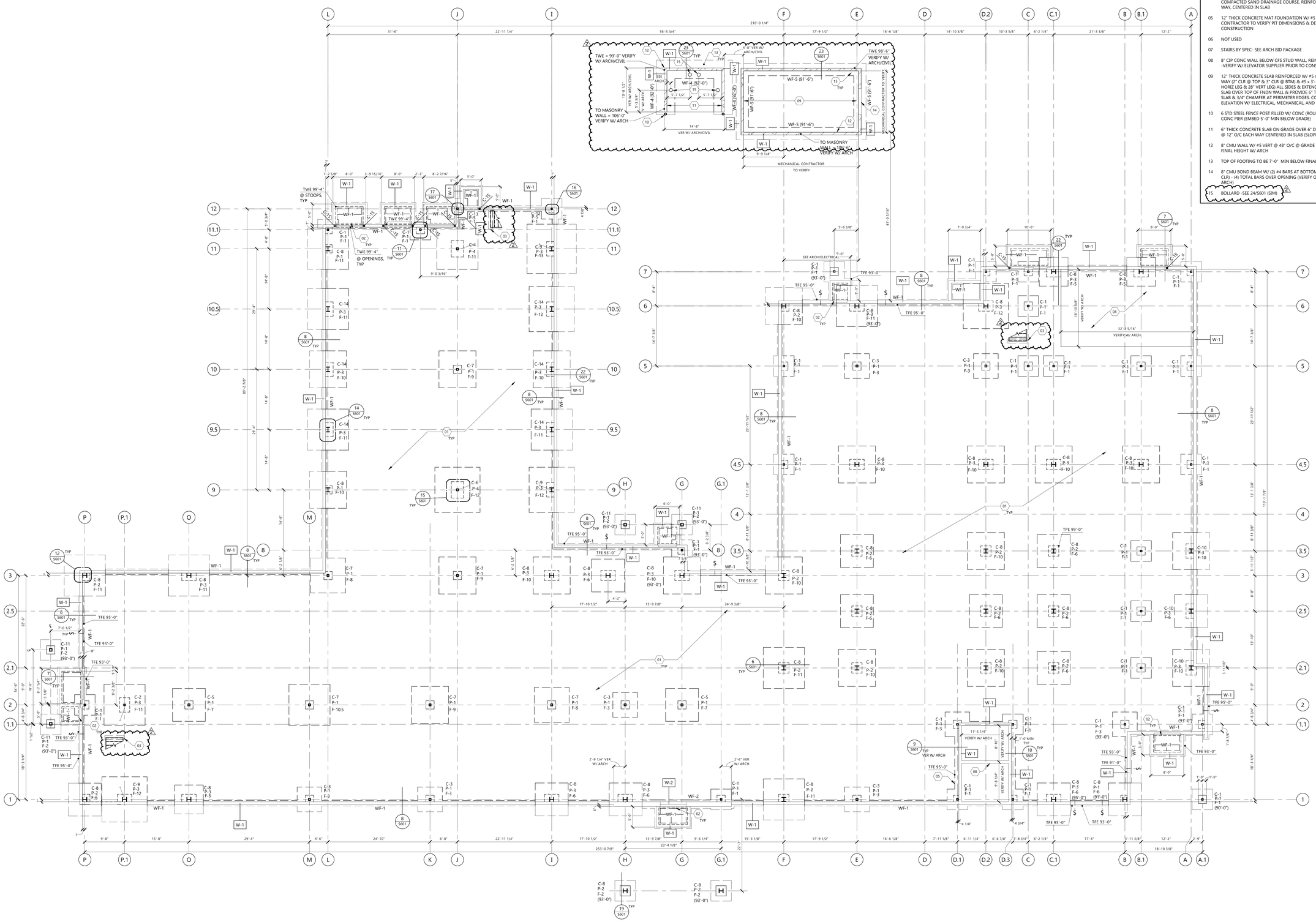

1 S201 FOUNDATION/FIRST FLOOR SLAB PLAN
1/8" = 1'-0"

EAPC
Architecture | Engineering
Interior Design | Industrial
TELEPHONE 701.258.3116
116 W. Main Ave., Suite A, Bismarck ND 58501
www.eapc.net

CONSULTANTS

CLIENT
VIBRA HOSPITALS OF THE CENTRAL DAKOTAS

PROJECT DESCRIPTION
BISMARCK REHABILITATION HOSPITAL

CITY BISMARCK
STATE NORTH DAKOTA

ISSUE DATES

MARK	DESCRIPTION	DATE
2	ADDENDUM #1	02/09/2026
1	ISSUED FOR BIDDING	01/28/2026

PROJECT NO: 20251200
DRAWN BY: SLR/TLR
CHECKED BY: JPM/SJW

COPYRIGHT:
All plans, specifications, computer files, field data, notes and other documents and instruments prepared by EAPC as instruments of service shall remain the property of EAPC. EAPC shall retain all common law, statutory and other reserved rights, including the copyright there to.

STAMP

REGISTERED PROFESSIONAL ENGINEER
SAMUEL J. WILKE
PE-6697
DATE 01-28-2026
NORTH DAKOTA

Drawing Title
FOUNDATION/FIRST FLOOR SLAB PLAN

S201

Revit Version: 2025
Plot Date: 2/6/2026 2:56:44 PM

SEE DETAILS 2, 6 & 7/S701 FOR TYPICAL FRAMING DETAILS NOT NOTED ON PLAN

TBE=114'-6 1/2" (UON)

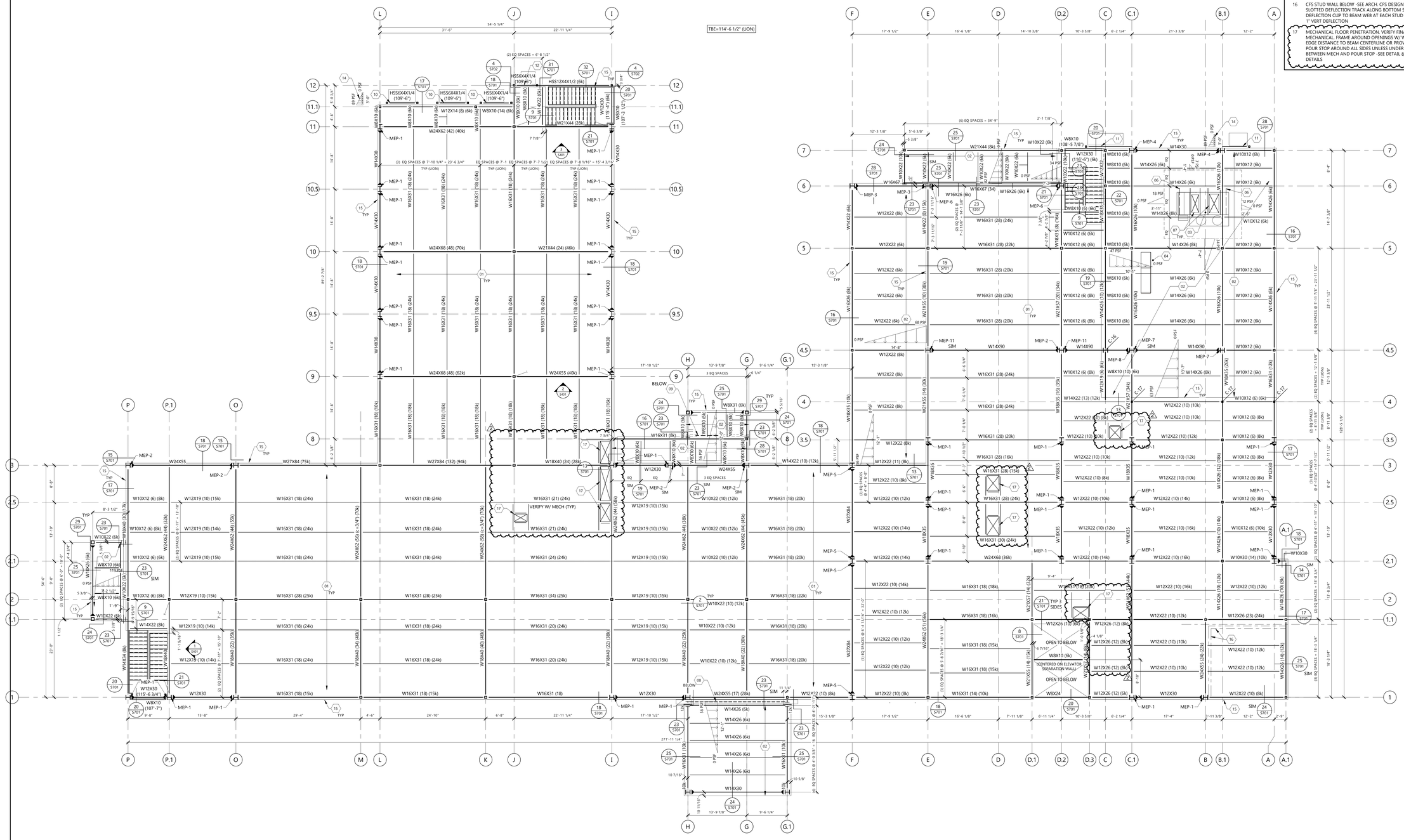

KEYNOTE LEGEND:

< < < INDICATES KEYNOTE ON PLAN

01	5 1/2" TOTAL THICKNESS CONCRETE SLAB REINFORCE W/ #3 @ 12" O/C CENTERED WITH 2" COMPOSITE 2VLI-36 METAL DECK (18 GA) SPAN PERPENDICULAR TO SUPPORTS.
02	3NL-32 METAL ROOF DECK (18 GA), SPAN PERPENDICULAR TO SUPPORTS
03	APPROXIMATE RTU WEIGHT OF 2.8K (SCREEN INCLUDED)- VERIFY SIZE & LOCATION W/ MECH
04	APPROXIMATE RTU WEIGHT OF 1.6K (SCREEN INCLUDED)- VERIFY SIZE & LOCATION W/ MECH
05	STAIR FABRICATION BY OTHERS - SEE ARCH
06	MC8x21.3/S701ED IN DECK FLUTES. EXTEND CHANNELS 4" PAST CENTERLINE OF LAST SUPPORTING MEMBER AT EACH END. COORDINATE FINAL LOCATION W/ MECH. SEE DETAIL
07	MECHANICAL PENETRATION. VERIFY EXACT SIZE AND LOCATION W/ MECH. SEE DETAIL 1/S701 FOR REQUIRED WELDED ANGLE FRAME
08	HSS12x6x1/4 (FLATWISE) HEADER & MC12x31 JAMB POSTS AT FRAMED OPNG & CENTERED WITHIN STUD WALL. VERIFY FINAL LOCATION, LENGTH & ELEVATION W/ ARCH. SEE DETAIL 26/S701 FOR CONNECTIONS AT TOP & BTM
09	HSS6x6x1/4 HEADER & MC6x15.1 JAMB POSTS AT FRAMED OPNG & CENTERED WITHIN STUD WALL. VERIFY FINAL LOCATION, LENGTH & ELEVATION W/ ARCH. SEE DETAIL 26/S701 FOR CONNECTIONS AT TOP & BTM.
10	STEEL FRAME FOR AWNING SUPPORT WITHIN STUD WALL, SEE DETAIL 1/S702
11	STEEL FRAME W/ HAUNCH CONNECTION FOR AWNING SUPPORT WITHIN STUD WALL, SEE DETAIL 2/S702
12	STEEL FRAME FOR AWNING SUPPORT WITHIN STUD WALL, SEE DETAIL 3/S702
13	HSS5x5x1/2 ELEVATOR RAIL POST AND BEAM SUPPORTS - NOT SHOWN. COORDINATE FINAL LAYOUT & LOCATIONS W/ ELEVATOR SUPPLIER DRAWINGS. PROVIDE CJP WELDS AT SPLICE LOCATIONS. SEE DETAILS 10/S701 & 27/S701
14	SNOW DRIFT ON EACH AWNING
15	INTERIOR FACE OF CFS STUD
16	CFS STUD WALL BELOW -SEE ARCH. CFS DESIGNER TO PROVIDE CONTINUOUS SLOTTED DEFLECTION TRACK ALONG BOTTOM SIDE OF FLOOR DECK OR SLOTTED DEFLECTION CLIP TO BEAM WEB AT EACH STUD SIM TO DETAIL 20/S701. ALLOW FOR 1" VERT DEFLECTION
17	MECHANICAL FLOOR PENETRATION. VERIFY FINAL SIZE AND LOCATION W/ MECHANICAL. FRAME AROUND OPENINGS W/ W8x10 (6k) BEAMS & PROVIDE 4" SLAB EDGE DISTANCE TO BEAM CENTERLINE OR PROVIDE 1/4" THICK x 5 1/2" TALL CONT POUR STOP AROUND ALL SIDES UNLESS UNDERNEATH MECH UNIT. PROVIDE 1" CLR BETWEEN MECH AND POUR STOP -SEE DETAIL 8/S701 & 21/S701 FOR SLAB EDGE DETAILS

1 S202 SECOND FLOOR FRAMING PLAN
1/8" = 1'-0"

EAPC
Architecture | Engineering
Interior Design | Industrial
TELEPHONE 701.258.3116
116 W. Main Ave., Suite A, Bismarck ND 58501
www.eapc.net

CONSULTANTS

CLIENT
VIBRA HOSPITALS OF THE CENTRAL DAKOTAS

PROJECT DESCRIPTION
BISMARCK REHABILITATION HOSPITAL

CITY BISMARCK
STATE NORTH DAKOTA

ISSUE DATES

MARK	DESCRIPTION	DATE
2	ADDENDUM #1	02/09/2026
1	ISSUED FOR BIDDING	01/28/2026

PROJECT NO: 20251200
DRAWN BY: SLR/TLR
CHECKED BY: JPM/SJW

COPYRIGHT:
All plans, specifications, computer files, field data, notes and other documents and instruments prepared by EAPC as instruments of service shall remain the property of EAPC. EAPC shall retain all common law, statutory and other reserved rights, including the copyright there to.

STAMP

REGISTERED PROFESSIONAL ENGINEER
SAMUEL J. WILKE
PE-6697
DATE 01-28-2026
NORTH DAKOTA

Drawing Title
SECOND FLOOR FRAMING PLAN

S202

Revit Version: 2025
Print Date: 2/5/2026 2:56:11 PM

SEE DETAILS 2, 6 & 7/S701 FOR TYPICAL FRAMING DETAILS NOT NOTED ON PLAN

KEYNOTE LEGEND:

< < <	INDICATES KEYNOTE ON PLAN
01	3NL-32 METAL ROOF DECK (18 GA), SPAN PERPENDICULAR TO SUPPORTS
02	APPROXIMATE RTU WEIGHT OF 2.8K (SCREEN INCLUDED) - VERIFY SIZE & LOCATION W/ MECH.
03	APPROXIMATE RTU WEIGHT OF 1.6K (SCREEN INCLUDED) - VERIFY SIZE & LOCATION W/ MECH. WILL INCLUDE SCREEN.
04	MC8x21.4 NESTED IN DECK FLUTES. EXTEND CHANNELS 4" PAST CENTERLINE OF LAST SUPPORTING MEMBER AT EACH END. COORDINATE FINAL LOCATION W/ MECH. SEE DETAIL 3/S701
05	MECHANICAL PENETRATION. VERIFY EXACT SIZE AND LOCATION W/ MECH. SEE DETAIL 1/S701 FOR REQUIRED WELDED ANGLE FRAME
06	INTERIOR FACE OF CFS STUD - VERIFY W/ ARCH
07	ROOF HATCH OPENING -VERIFY LOCATION W/ ARCH

TBE=129'-9" (UON)

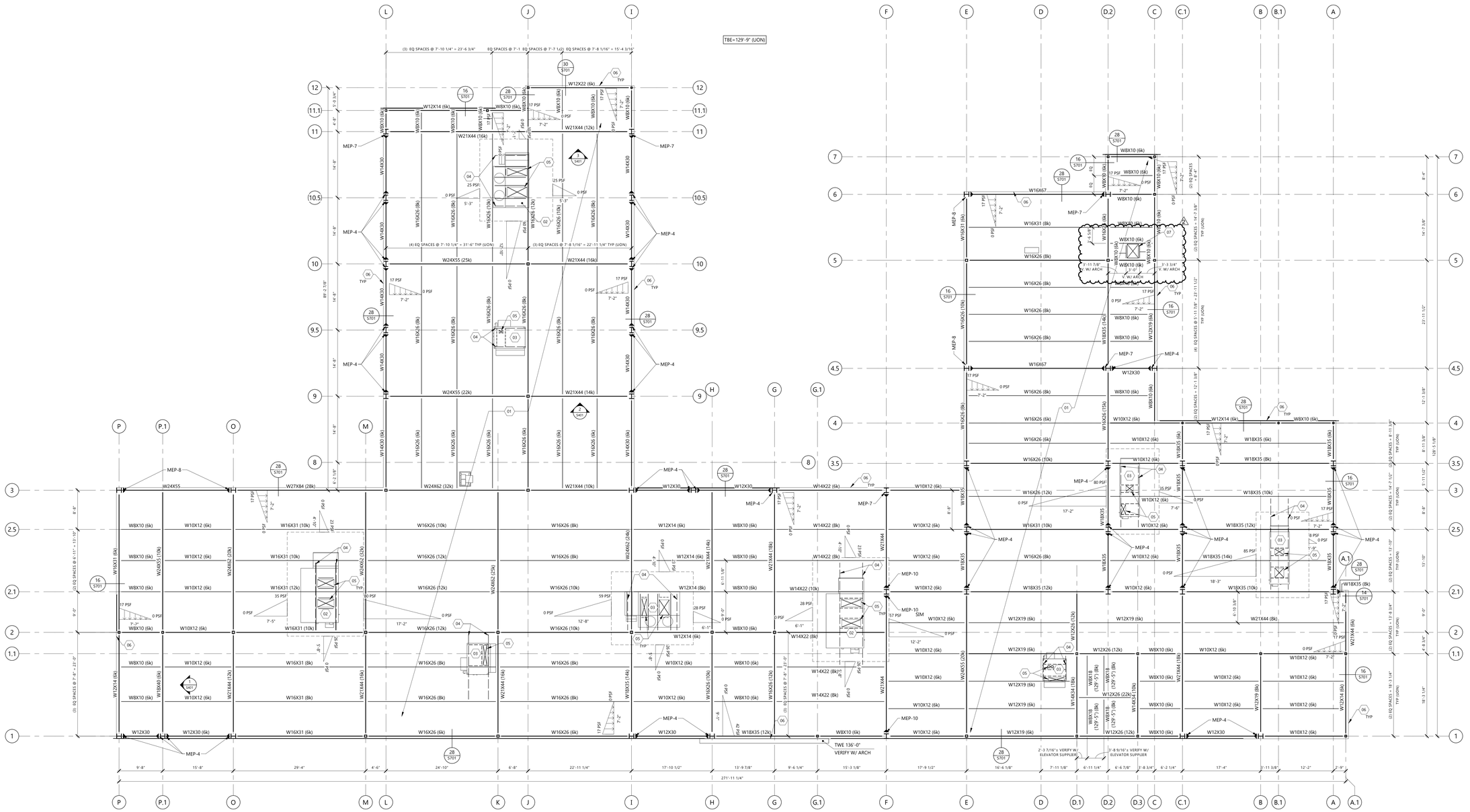

1 ROOF FRAMING PLAN
S203 1/8" = 1'-0"

EAPC
Architecture | Engineering
Interior Design | Industrial
TELEPHONE 701.258.3116
116 W. Main Ave., Suite A, Bismarck ND 58501
www.eapc.net

CONSULTANTS

CLIENT
VIBRA HOSPITALS OF THE CENTRAL DAKOTAS

PROJECT DESCRIPTION
BISMARCK REHABILITATION HOSPITAL

CITY BISMARCK
STATE NORTH DAKOTA

ISSUE DATES

MARK	DESCRIPTION	DATE
2	ADDENDUM #1	02/09/2026
1	ISSUED FOR BIDDING	01/28/2026

PROJECT NO: 20251200
DRAWN BY: SLR/TLR
CHECKED BY: JPM/SJW

COPYRIGHT:
All plans, specifications, computer files, field data, notes and other documents and instruments prepared by EAPC as instruments of service shall remain the property of EAPC. EAPC shall retain all common law, statutory and other reserved rights, including the copyright there to.

STAMP

REGISTERED PROFESSIONAL ENGINEER
SAMUEL J. WILKE
PE-6697
DATE 01-28-2026
NORTH DAKOTA

Drawing Title
ROOF FRAMING PLAN

S203

Revit Version: 2025
Plot Date: 02/12/2026 2:56:54 PM

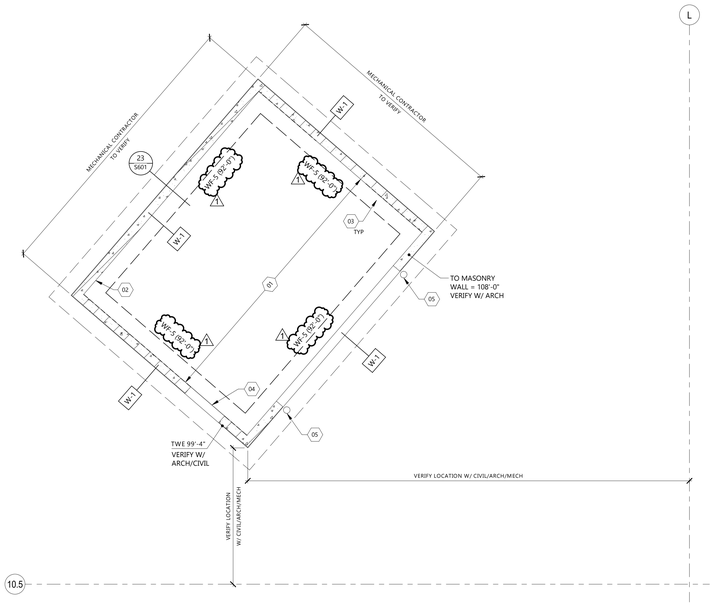

1 S501 MED GAS ENCLOSURE ENLARGED FOUNDATION/FIRST FLOOR SLAB PLAN
1/4" = 1'-0"

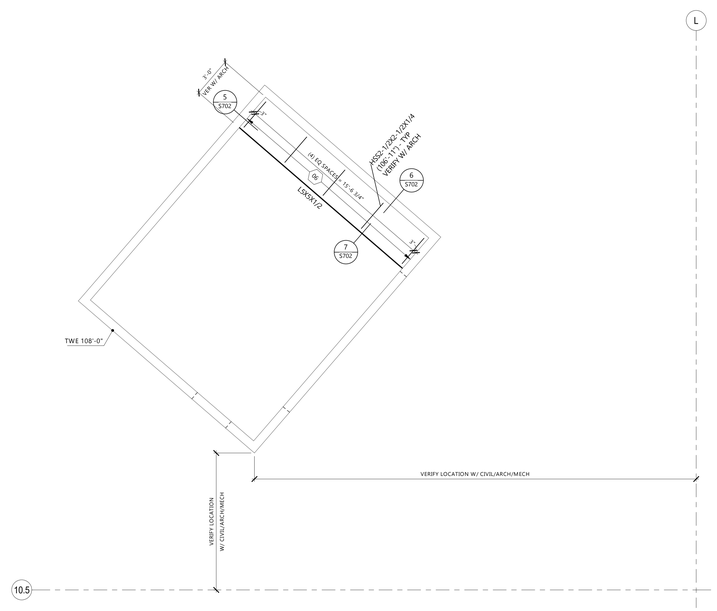

2 S501 MED GAS ENCLOSURE ENLARGED ROOF FRAMING PLAN
1/4" = 1'-0"

KEYNOTE LEGEND:

< < < INDICATES KEYNOTE ON PLAN

01	12" THICK CONCRETE SLAB REINFORCED W/ #5 @ 12" O/C, TOP AND BOTTOM, EACH WAY (2" CLR @ TOP & 3" CLR @ BTM) & #5 x 3'-10" BENT BAR DOWELS @ 12" O/C (18" HORIZ LEG & 28" VERT LEG) ALL SIDES & EXTENDED TO TOP LAYER OF REINF. POUR SLAB OVER TOP OF FNDN WALL & PROVIDE 6" THICK VOID FORM AT UNDERSIDE OF SLAB & 3/4" CHAMFER AT PERIMETER EDGES. COORDINATE FINAL LOCATION AND ELEVATION W/ ELECTRICAL, MECHANICAL, AND CIVIL
02	8" CMU WALL W/ #5 VERT @ 48" O/C @ GRADE ELEV (COORDINATE W/ CIVIL), VERIFY FINAL HEIGHT W/ ARCH
03	TOP OF FOOTING TO BE 7'-0" MIN BELOW FINAL GRADE. COORDINATE W/ CIVIL
04	8" CMU BOND BEAM W/ (2) #4 BARS AT BOTTOM (2" CLR) AND (2) #4 BARS AT TOP (2" CLR) - (4) TOTAL BARS OVER OPENING (VERIFY OPNG HEIGHT AND LOCATION W/ ARCH)
05	BOLLARD - SEE 24/S601
06	1.5B-36 METAL ROOF DECK (20 GA), SPAN PERPENDICULAR TO SUPPORTS W/ HILTI X-ENP 19 POWDER ACTUATED FASTENERS ON A 36/4 PATTERN W/ (2) #10 TEK SCREWS @ 12" O/C AT SIDELAP.

EAPC
Architecture | Engineering
Interior Design | Industrial
TELEPHONE 701.258.3116
116 W. Main Ave., Suite A, Bismarck ND 58501
www.eapc.net

CONSULTANTS

CLIENT
VIBRA HOSPITALS OF THE CENTRAL DAKOTAS

PROJECT DESCRIPTION
REHABILITATION HOSPITAL

CITY BISMARCK
STATE NORTH DAKOTA

ISSUE DATES

MARK	DESCRIPTION	DATE
1	ADDENDUM #1	02/09/2026

PROJECT NO: 20251200
DRAWN BY: SLR/TLR
CHECKED BY: JPM/SJW

COPYRIGHT:
All plans, specifications, computer files, field data, notes and other documents and instruments prepared by EAPC as instruments of service shall remain the property of EAPC. EAPC shall retain all common law, statutory and other reserved rights, including the copyright there to.

STAMP

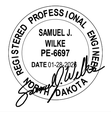

Drawing Title
ENLARGED PLANS

S501

Revit Version: 2025
Plot Date: 2/6/2026 2:56:56 PM

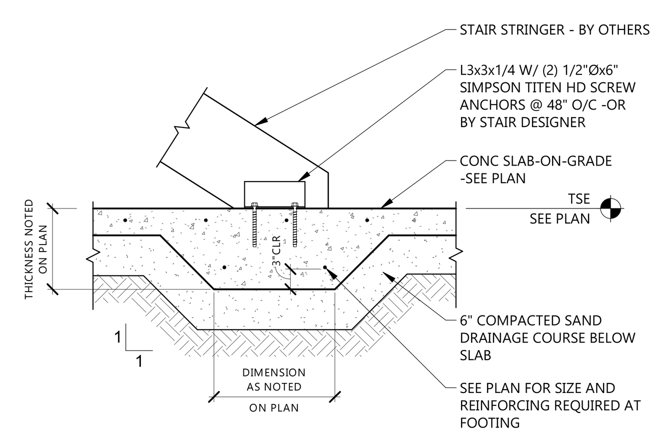

25 S601 THICKENED SLAB @ STAIR STRINGER
3/4" = 1'-0"

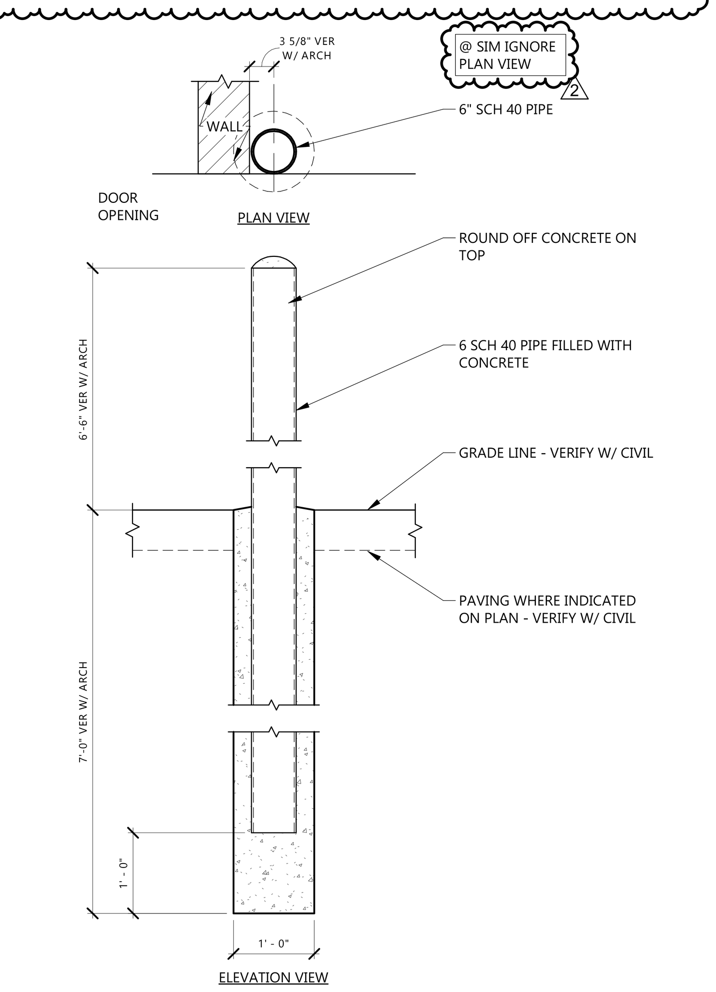

24 S601 BOLLARD DETAIL
3/4" = 1'-0"

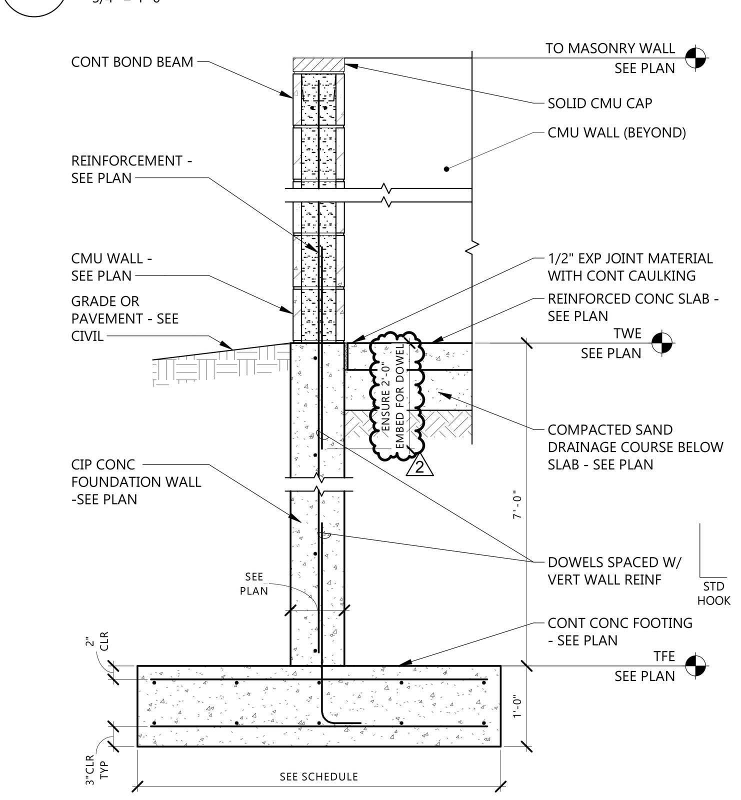

23 S601 TRASH/GENERATOR ENCLOSURE
3/4" = 1'-0"

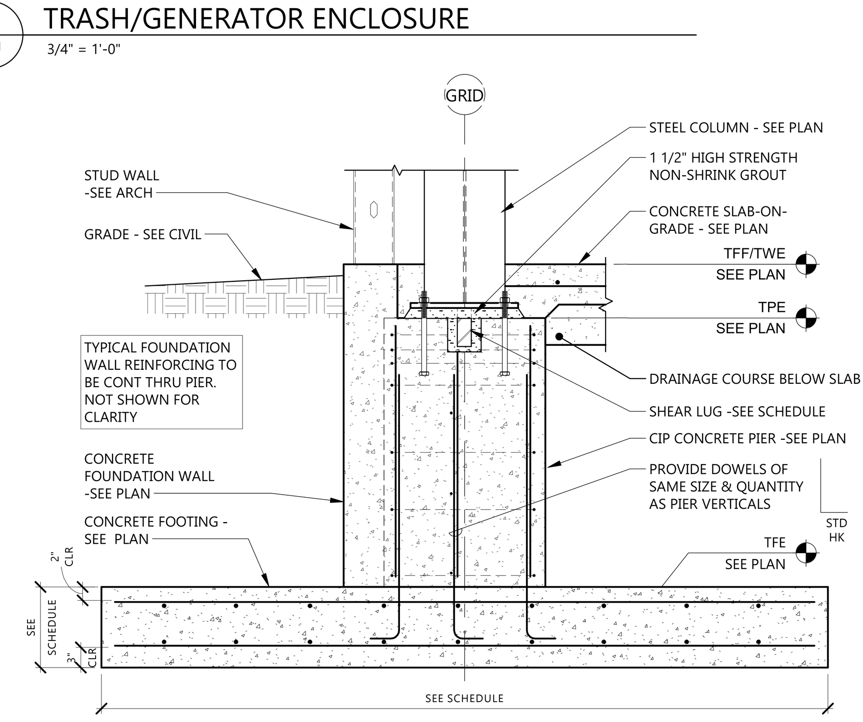

22 S601 SECTION @ COL/PIER/FTG
3/4" = 1'-0"

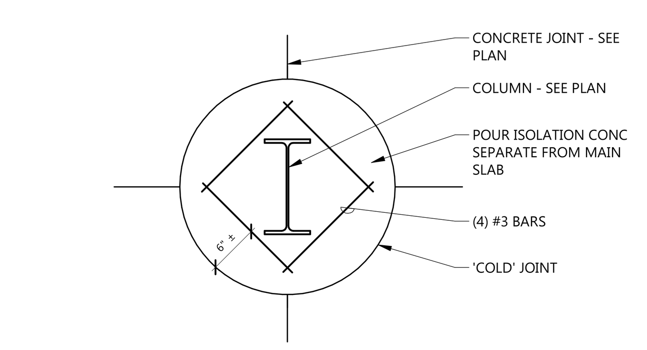

21 S601 COULMN ISOLATION JOINT @ W COLUMN
3/4" = 1'-0"

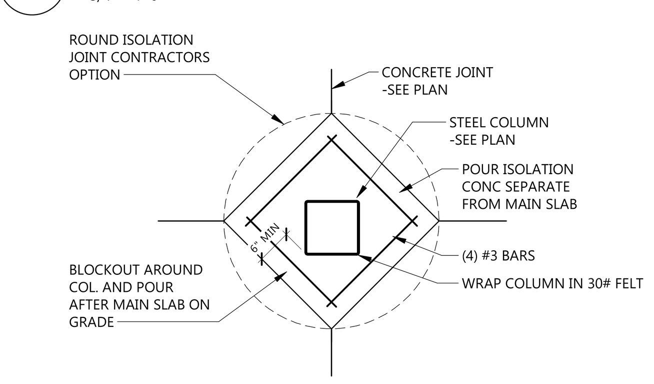

20 S601 COLUMN ISOLATION JOINT @ HSS COLUMN
3/4" = 1'-0"

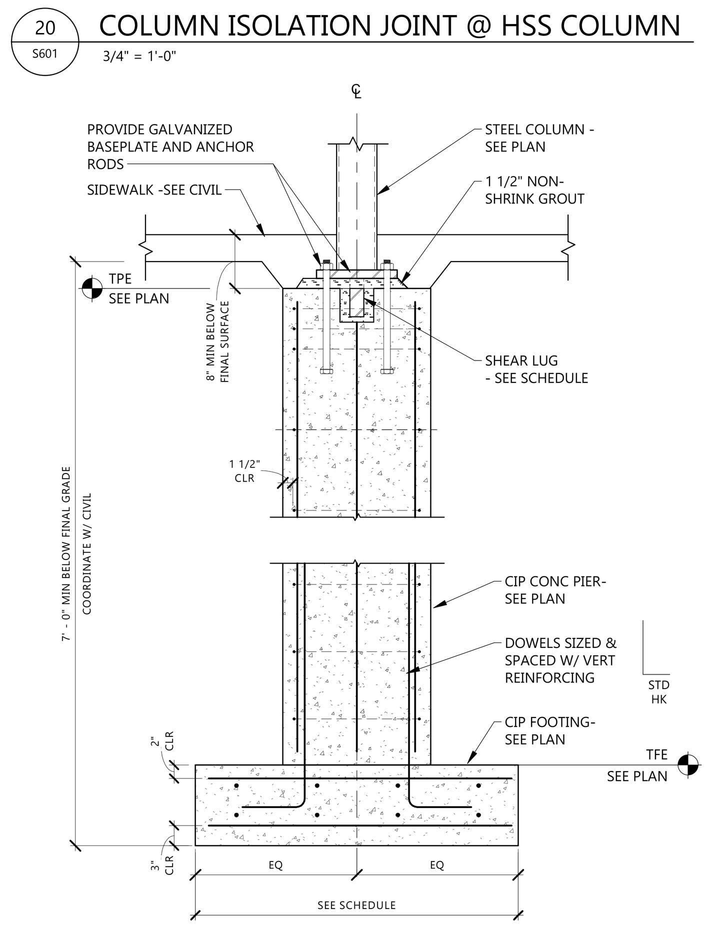

19 S601 EXTERIOR PIER/FOOTING DETAIL
3/4" = 1'-0"

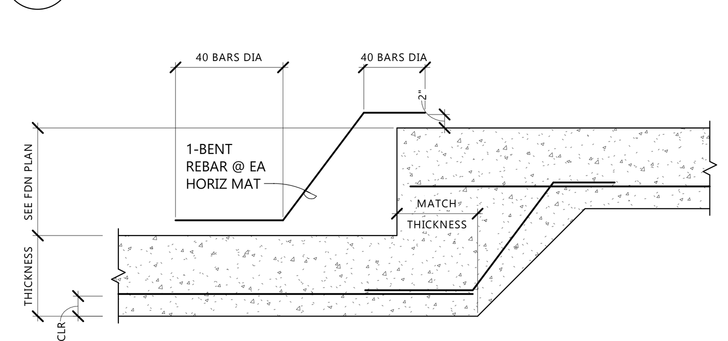

18 S601 TYPICAL STEP FOOTING
3/4" = 1'-0"

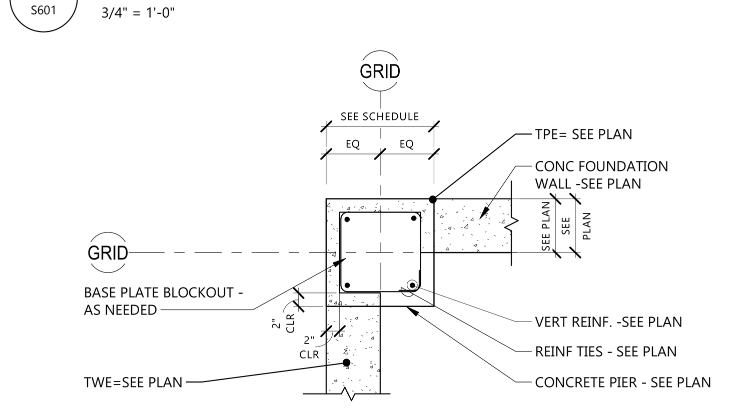

17 S601 PIER PLAN @ P-5 @ CORNER
3/4" = 1'-0"

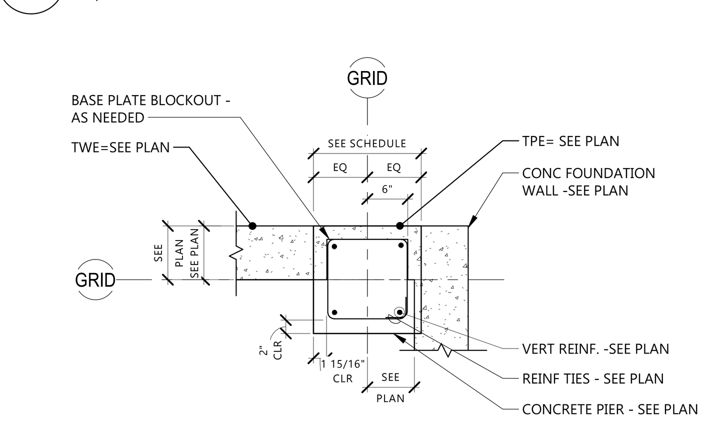

16 S601 PIER PLAN @ P-5
3/4" = 1'-0"

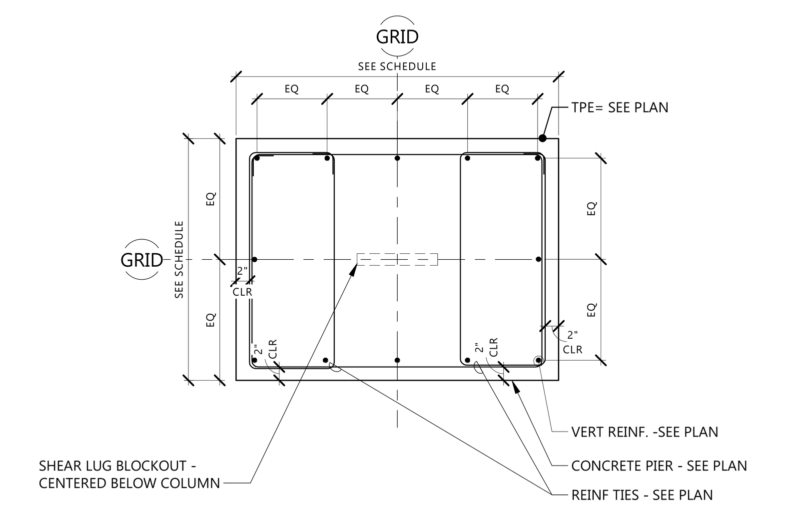

15 S601 PIER PLAN @ P-4
3/4" = 1'-0"

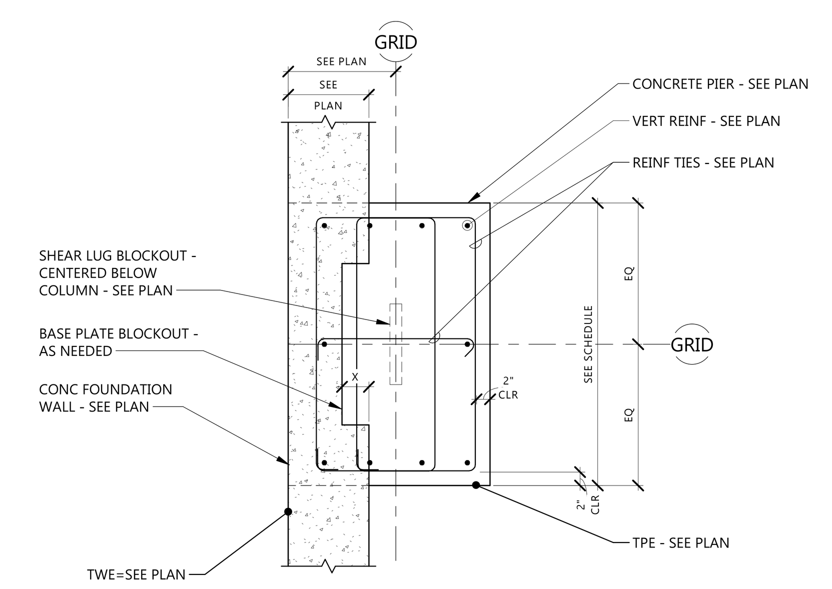

14 S601 PIER PLAN @ P-3
3/4" = 1'-0"

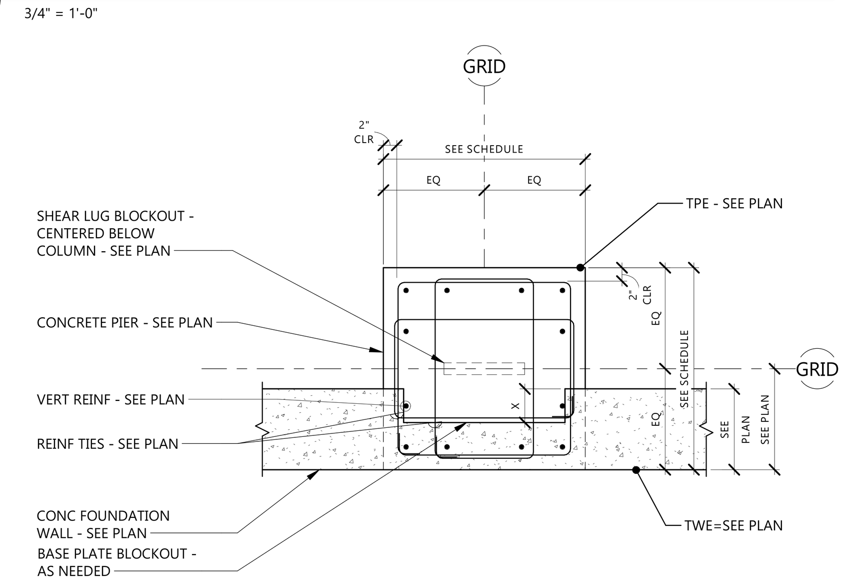

13 S601 PIER PLAN @ P-2
3/4" = 1'-0"

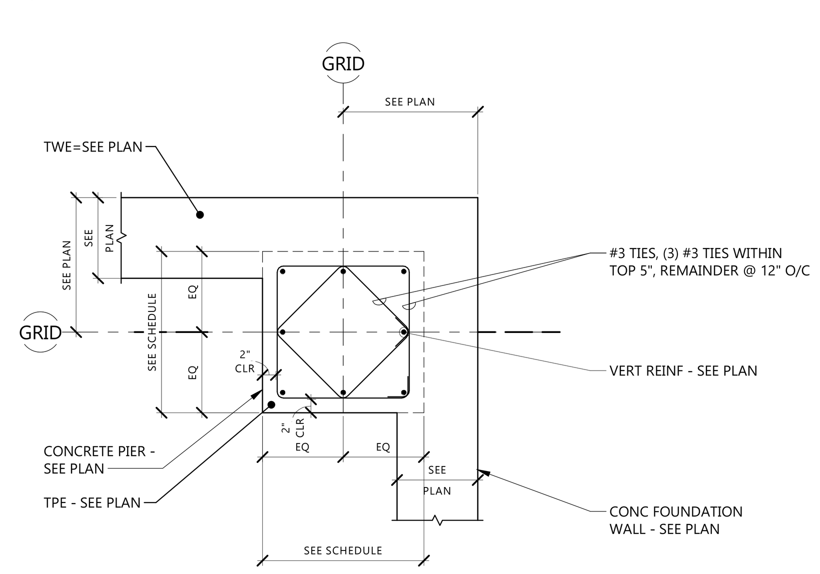

12 S601 PIER PLAN @ CORNER
3/4" = 1'-0"

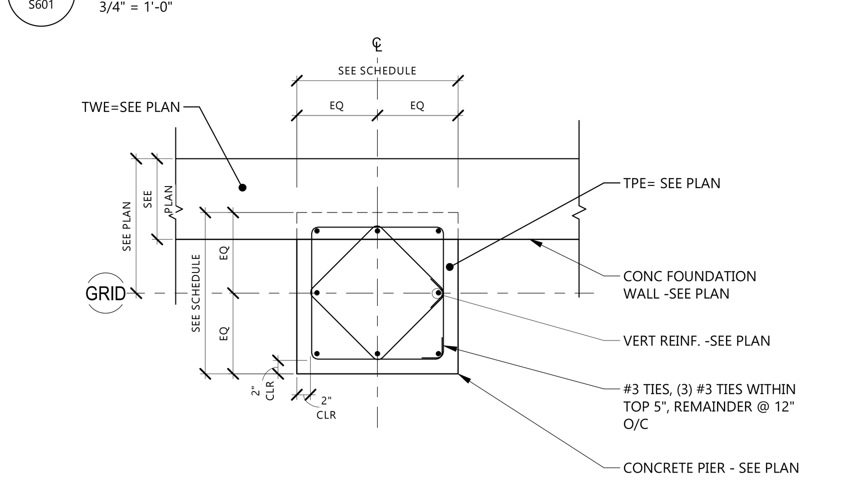

11 S601 PIER PLAN @ P-1
3/4" = 1'-0"

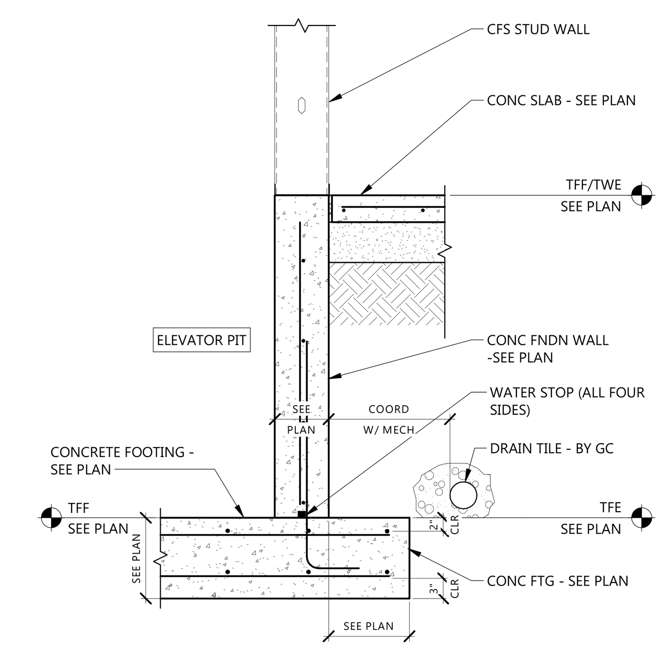

10 S601 ELEVATOR PIT SECTION @ CFS STUD WALL
3/4" = 1'-0"

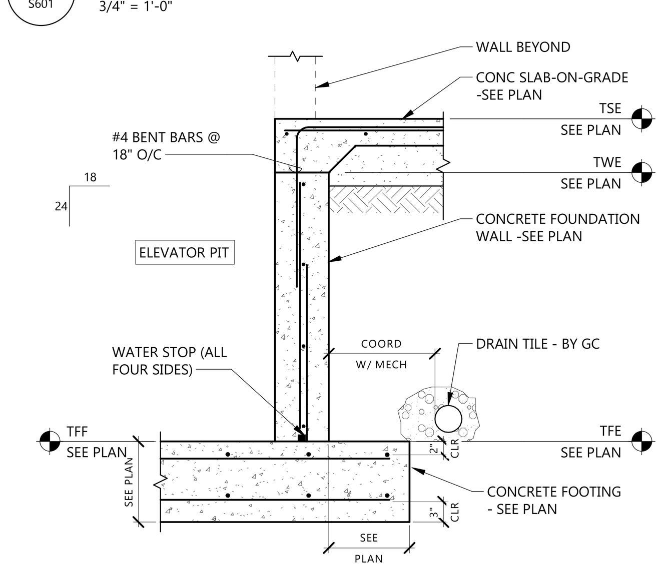

9 S601 ELEVATOR PIT SECTION @ DOOR OPENING
3/4" = 1'-0"

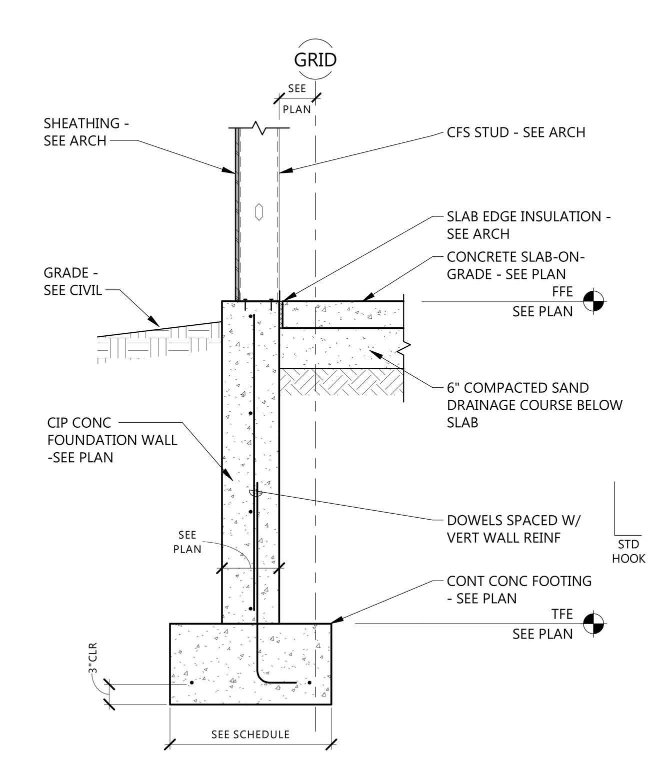

8 S601 TYP EXTERIOR FOUNDATION WALL
3/4" = 1'-0"

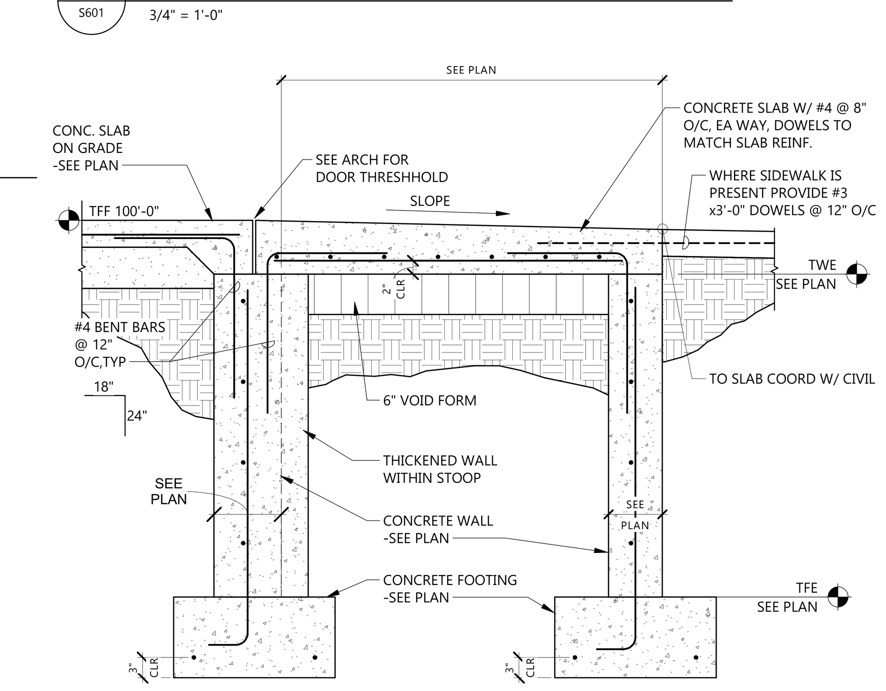

7 S601 TYPICAL STOOP DETAIL
3/4" = 1'-0"

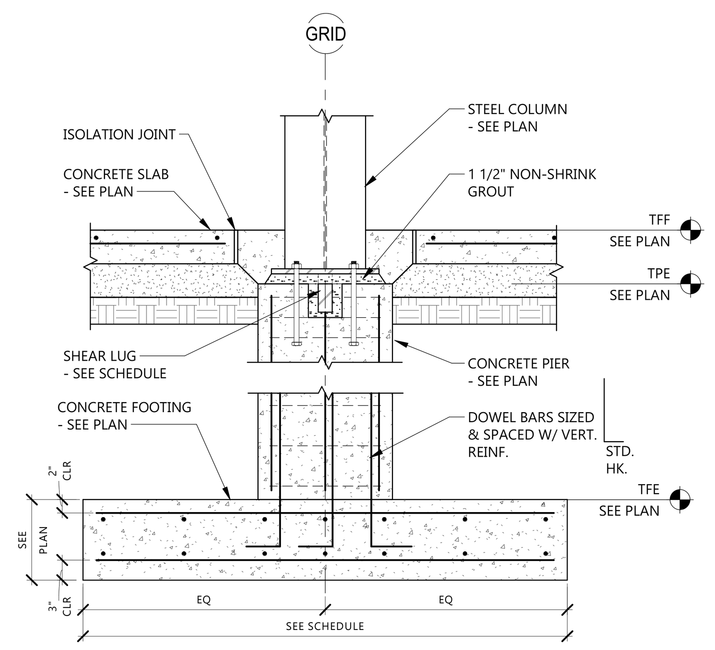

6 S601 INTERIOR PIER/FOOTING DETAIL
3/4" = 1'-0"

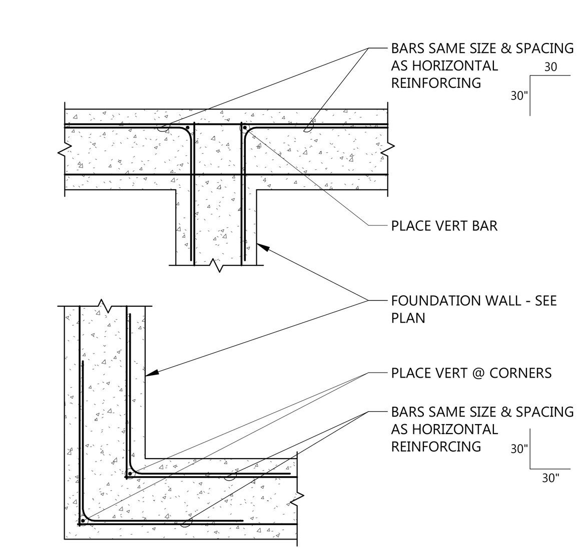

5 S601 TYPICAL FDN CORNERS-DOUBLE
3/4" = 1'-0"

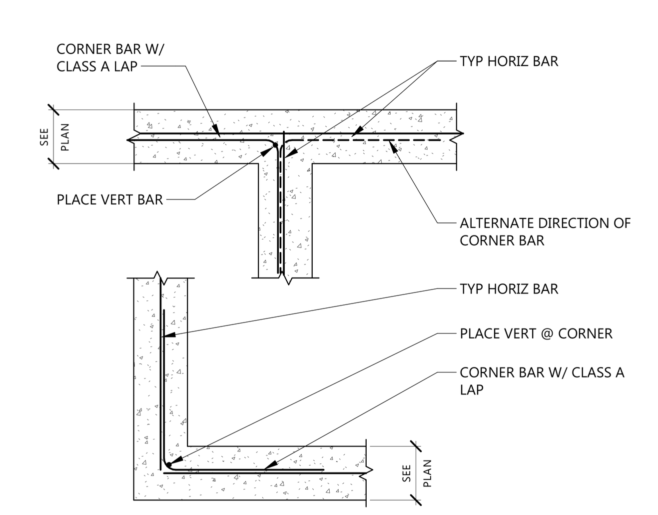

4 S601 TYPICAL FDN CORNERS
3/4" = 1'-0"

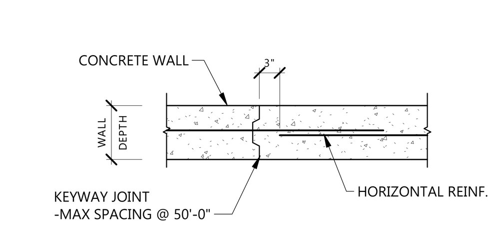

3 S601 TYP WALL CONSTRUCTION JOINT -SINGLE LAYER
3/4" = 1'-0"

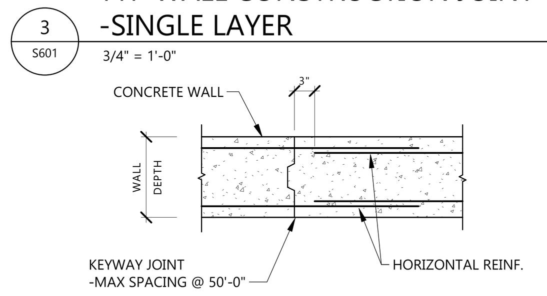

2 S601 TYP WALL CONSTRUCTION JOINT -DOUBLE LAYER
3/4" = 1'-0"

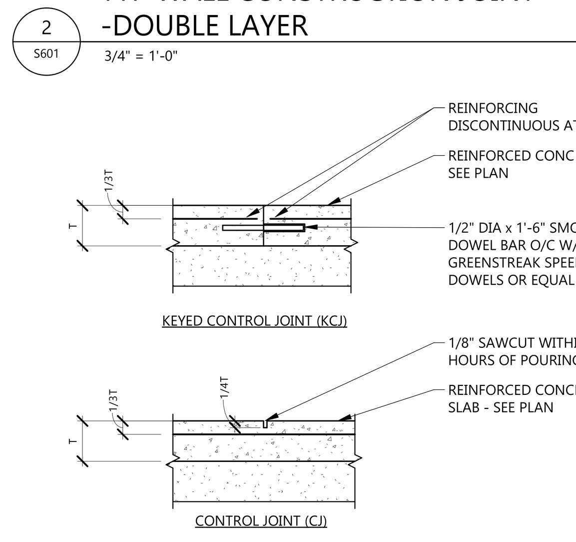

1 S601 SLAB CONTROL JOINTS
3/4" = 1'-0"

Revit Version: 2025
Plot Date: 2/6/2026 2:56:58 PM

EAPC
Architecture | Engineering
Interior Design | Industrial
TELEPHONE 701.258.3116
116 W. Main Ave., Suite A, Bismarck ND 58501
www.eapc.net

CONSULTANTS

CLIENT
VIBRA HOSPITALS OF THE CENTRAL DAKOTAS

PROJECT DESCRIPTION
BISMARCK REHABILITATION HOSPITAL

CITY BISMARCK
STATE NORTH DAKOTA

ISSUE DATES

MARK	DESCRIPTION	DATE
2	ADDENDUM #1	02/09/2026
1	ISSUED FOR BIDDING	01/28/2026

PROJECT NO: 20251200
DRAWN BY: SLR/TLR
CHECKED BY: JPM/SJW

COPYRIGHT:
All plans, specifications, computer files, field data, notes and other documents and instruments prepared by EAPC as instruments of service shall remain the property of EAPC. EAPC shall retain all common law, statutory and other reserved rights, including the copyright there to.

STAMP
REGISTERED PROFESSIONAL ENGINEER SAMUEL J. WILKE PE-6697 DATE 01-28-2026 NORTH DAKOTA

Drawing Title
FOUNDATION DETAILS

S601

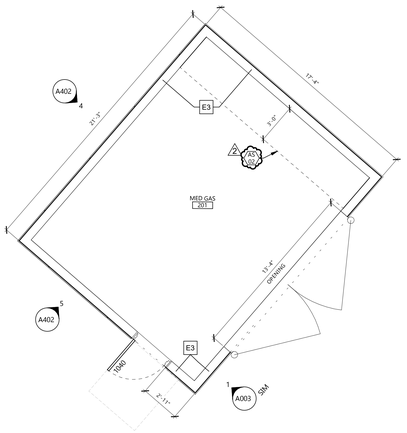

5 A003 ENLARGED PLAN - MED GAS ENCLOSURE
1/4" = 1'-0"

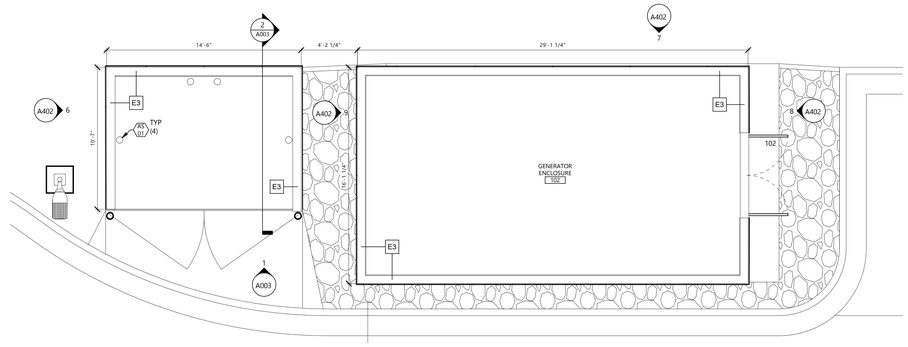

4 A003 ENLARGED PLAN - TRASH AND GENERATOR ENCLOSURES
1/4" = 1'-0"

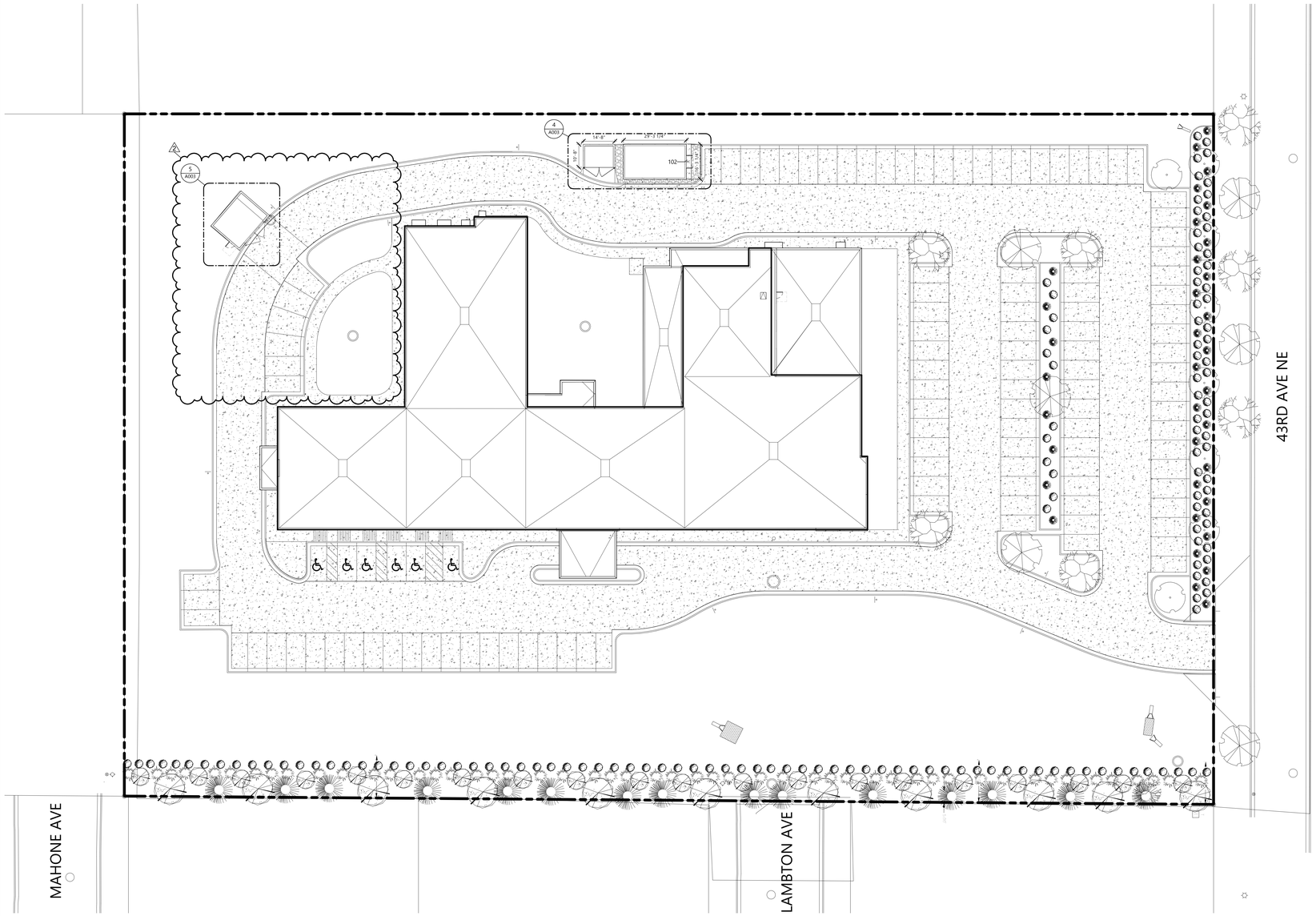

3 A003 SITE PLAN
1" = 20'-0"

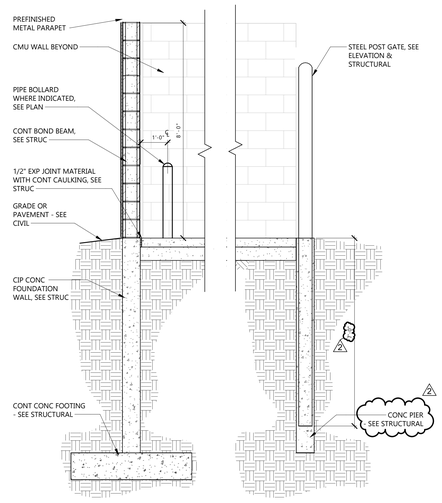

2 A003 WALL SECTION - EXTERIOR ENCLOSURE
1/2" = 1'-0"

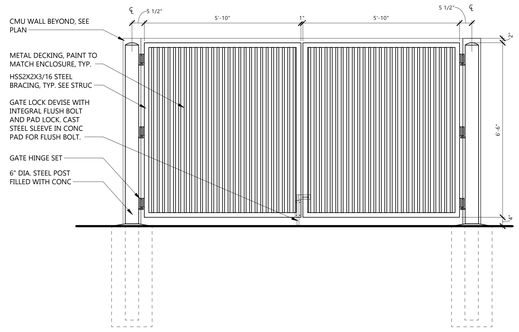

1 A003 EXTERIOR ENCLOSURE GATE
1/2" = 1'-0"

ARCHITECTURAL FLOOR PLAN SYMBOLS

1. 1. FOR ADDITIONAL SITE PLAN INFORMATION SEE CIVIL, STRUCTURAL, MECHANICAL AND ELECTRICAL DOCUMENTS
2. FINISH FLOOR ELEVATION 100'-0" = 3607.1 COORDINATE WITH CIVIL DOCUMENTS
3. CONSTRUCTION SHALL CONFORM TO THE DRAWINGS AND SPECIFICATIONS AND SHALL NOT BE CHANGED WITHOUT THE PRIOR WRITTEN APPROVAL OF THE ARCHITECT AND ENGINEER OF RECORD.
4. THE CONTRACTOR IS RESPONSIBLE FOR THE FOLLOWING:
   A. ANY PERMITS OR LICENSES REQUIRED FOR CONSTRUCTION
   B. PROPER NOTIFICATION OF NECESSARY AGENCIES PRIOR TO CONSTRUCTION AND INSPECTIONS
   C. CONTROL OF POLLUTION, SURFACE WATER AND EROSION THROUGHOUT THE DURATION OF THE CONTRACT
   D. EXACT LOCATION OF UTILITY LINES AND COORDINATION OF DISRUPTION IN SERVICES WITH AFFECTED PARTIES
5. LOCATIONS AND ELEVATIONS SHALL BE VERIFIED IN FIELD PRIOR TO CONSTRUCTION. NOTIFY ARCHITECT AND ENGINEERS OF RECORD OF ANY CRITICAL FEATURES NOT SHOWN IN THE DOCUMENTS WHICH ARE THOUGHT TO IMPACT CONSTRUCTION.
6. CONCRETE SHALL BE COMPLETED AND ALLOWED TO CURE SUFFICIENTLY PRIOR TO COMMENCING BACKFILL, SEE SPECIFICATIONS
7. WORK SHALL BE IN ACCORDANCE WITH OSHA CODES AND STANDARDS. NOTHING INDICATED IN THESE DRAWINGS SHALL RELIEVE THE CONTRACTOR FROM COMPLYING WITH ANY APPROPRIATE SAFETY REGULATIONS

WORK SHALL BE IN ACCORDANCE WITH AHI FEDERAL, STATE AND LOCAL CODES AND REGULATIONS. NOTIFY OWNER, ARCHITECT AND ENGINEERS OF RECORD IF ANY QUESTIONS OR CONFLICTS ARISE.

PLANTINGS AND VEGETATION

1. PROTECT EXISTING TREES AND LANDSCAPED AREAS AROUND SIDE AS IMPACTED BY THE CONSTRUCTION ZONE. NOTIFY OWNER, ARCHITECT AND ENGINEERS OF RECORD AS CONFLICTS ARISE.
2. DISTURBED AREAS NOT COVERED BY THE NEW SCOPE OF WORK SHALL BE PLANTED WITH EROSION CONTROL GRASSES THRIVING IN THE REGION. SUBMIT GRASSES MIX FOR APPROVAL PRIOR TO PLANTING

SITE ACCESS AND PROTECTIONS:

1. CONTRACTOR SHALL USE DESIGNATED ACCESS ROUTES TO THE PROJECT SITE AND SHALL REPAIR AREAS DAMAGED OUTSIDE OF THE DESIGNATED CONSTRUCTION ZONE FOR THE PROJECT AT THEIR OWN EXPENSE.
2. CONTRACTOR SHALL NOT OPERATE EQUIPMENT, STORE MATERIALS/SUPPLIES, OR OTHERWISE DISTURB WETLANDS OR CONTROLLED SENSITIVE AREAS ADJACENT TO THE PROJECT SITE. CONTRACT SHALL BE RESPONSIBLE FOR IMPACTS FROM THEMSELVES AND THEIR SUBCONTRACTORS
3. CONTRACTOR IS RESPONSIBLE FOR LOCATING AND MARKING UTILITIES IN THE PROJECT SITE AND FOR PROTECTING UTILITIES FOR THE DURATION OF CONSTRUCTION. DAMAGED UTILITIES SHALL BE REPAIRED AT THE CONTRACTOR'S EXPENSE.
4. CONTRACTOR IS RESPONSIBLE FOR HAULING AND PLACING OF EXCESS MATERIALS FROM THE SITE AS DIRECTED BY THE OWNER.
5. THE CONTRACTOR IS TO LIMIT ACCESS TO THE SITE BY UNAUTHORIZED PERSONS WITH SECURELY FENCE AND CLEARLY MARK THE CONSTRUCTION ZONE.

KEYNOTE LEGEND:

< < < INDICATES KEYNOTE ON PLAN

AS 01 6" PIPE BOLLARD, SEE TYPICAL DETAIL ON SHEET A003.

AS 02 METAL PANEL ROOF ABOVE, REFER TO STRUCTURAL FOR MOUNTING.

EAPC
Architecture | Engineering
Interior Design | Industrial
TELEPHONE 701.258.3116
116 W. Main Ave., Suite A, Bismarck ND 58501
www.eapc.net

CONSULTANTS

CLIENT
VIBRA HOSPITALS OF THE CENTRAL DAKOTAS

PROJECT DESCRIPTION
BISMARCK REHABILITATION HOSPITAL

CITY BISMARCK
STATE NORTH DAKOTA

ISSUE DATES

MARK	DESCRIPTION	DATE
2	ADDENDUM #1	02/09/2025
1	ISSUED FOR BIDDING	01/29/2026

PROJECT NO: 20251200
DRAWN BY: JB
CHECKED BY: BD

COPYRIGHT:
All plans, specifications, computer files, field data, notes and other documents and instruments prepared by EAPC as instruments of service shall remain the property of EAPC. EAPC shall retain all common law, statutory and other reserved rights, including the copyright there to.

STAMP

I hereby certify that this plan, specification, or report was prepared by me or under my direct supervision and that I am a duly Registered Architect under the laws of the State of North Dakota.

Signature:

Date: 02/09/2026 REG. NO. 1718

Drawing Title
ARCHITECTURAL SITE PLAN, DETAILS

A003

Rev 9 Version 2025
Plot Date: 2/11/2026 7:15:16 PM

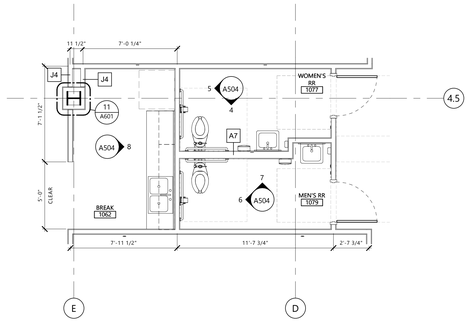

2 A504 ENLARGED PLAN - STAFF TOILET/BREAK ROOM
1/4" = 1'-0"

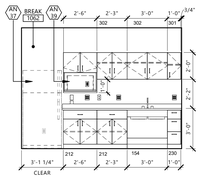

8 A504 BREAK - NORTH
1/4" = 1'-0"

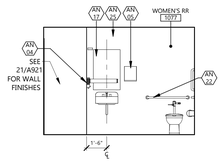

4 A504 M. TLT - EAST
1/4" = 1'-0"

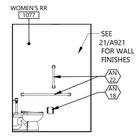

5 A504 M. TLT - SOUTH
1/4" = 1'-0"

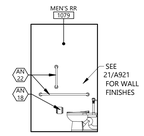

6 A504 F. TLT - SOUTH
1/4" = 1'-0"

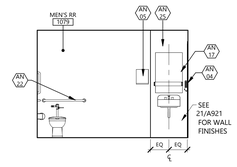

7 A504 F. TLT - WEST
1/4" = 1'-0"

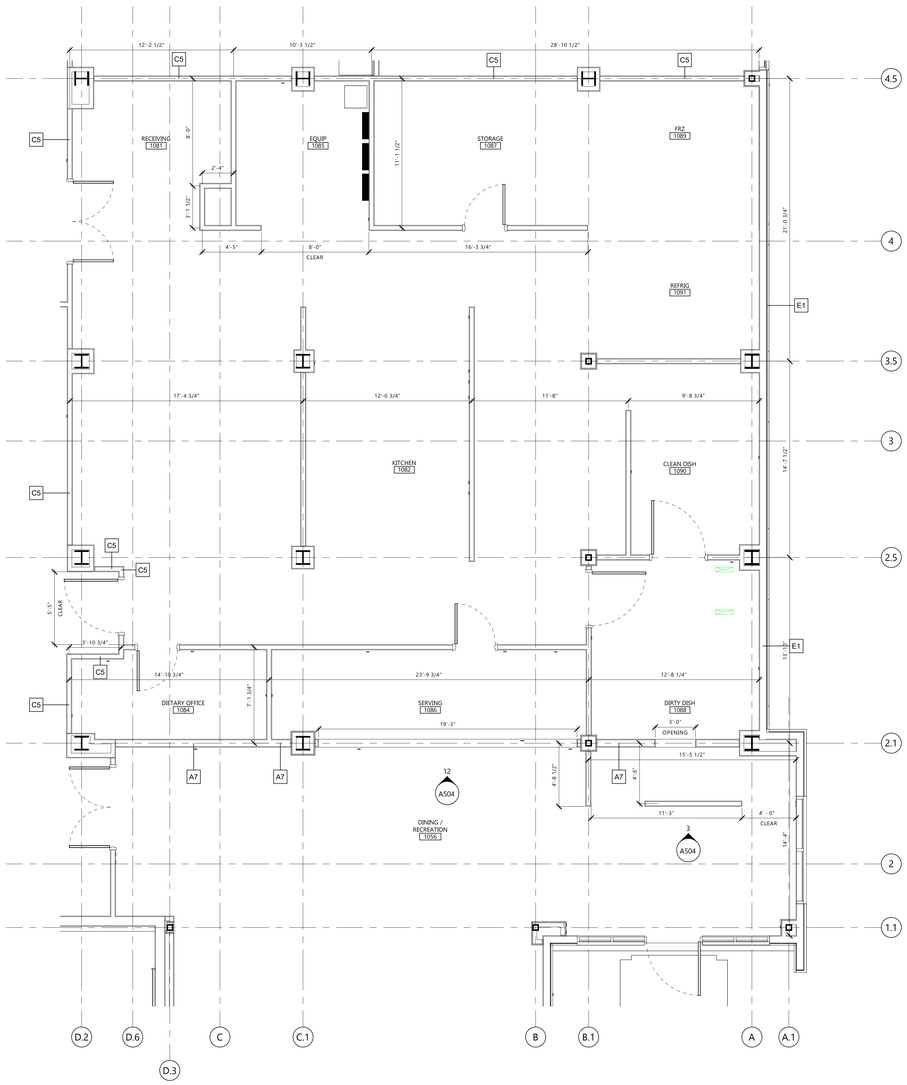

1 A504 KITCHEN ENLARGED PLAN
1/4" = 1'-0"

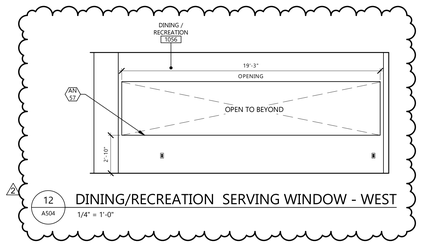

12 A504 DINING/RECREATION SERVING WINDOW - WEST
1/4" = 1'-0"

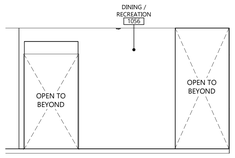

3 A504 DINING/RECREATION - WEST
1/4" = 1'-0"

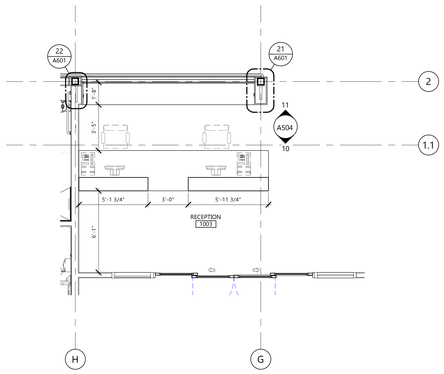

9 A504 RECEPTION - ENLARGED PLAN
1/4" = 1'-0"

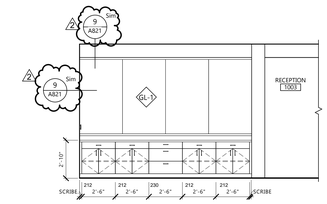

11 A504 RECEPTION - WEST
1/4" = 1'-0"

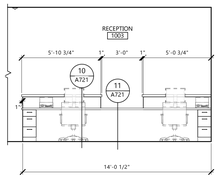

10 A504 RECEPTION - EAST
1/4" = 1'-0"

GENERAL NOTES

1. CASEWORK TO BE PLAM-1, UNO.
2. COUNTERTOPS TO BE SOLID SURFACE (SSF-1), UNO.
3. FURNITURE IS SHOWN HALFTONE AND DASHED, BY OWNER'S FURNITURE VENDOR.
4. WINDOW SILLS TO RECEIVE SOLID SURFACE SILL (SSF-2).
5. DASHED EQUIPMENT SHOWN FOR REFERENCE ONLY. REFER TO EQUIPMENT DRAWINGS AND LIST FOR REQUIREMENTS.
6. ALL SHOWER WALLS TO BE (SSF-4), UNO.

INTERIOR ELEVATIONS LEGEND

HW	HAND WAVE	P	POWER
S	SWITCH	D	DATA
CB	CODE BLUE	PP	PUSH PAD
DS	DUTY STATION		

KEYNOTE LEGEND:

< < < INDICATES KEYNOTE ON PLAN

AN 04	SOAP DISPENSER (OFCI)
AN 05	PAPER TOWEL DISPENSER (OFCI)
AN 17	24" x 36" CHANNEL FRAMED WALL MOUNTED MIRROR.
AN 18	TOILET PAPER DISPENSER. (CFCI)
AN 22	ADA GRAB BARS - SEE TYPICAL MOUNTING HEIGHTS AND LOCATIONS DIAGRAM FOR REQUIREMENTS.
AN 25	WALL SCONCE - REFER TO ELECTRICAL DRAWINGS.
AN 37	REFRIGERATOR. (OFCI)
AN 39	MICROWAVE (OFCI)
AN 57	FINAL HEIGHT TO BE 2'-10". CORDINATE FINAL HEIGHT WITH KITCHEN VENDOR.

EAPC
Architecture | Engineering
Interior Design | Industrial
TELEPHONE 701.258.3116
116 W. Main Ave., Suite A, Bismarck ND 58501
www.eapc.net

CONSULTANTS

CLIENT
VIBRA HOSPITALS OF THE CENTRAL DAKOTAS

PROJECT DESCRIPTION
BISMARCK REHABILITATION HOSPITAL

CITY BISMARCK
STATE NORTH DAKOTA

ISSUE DATES

MARK	DESCRIPTION	DATE
2	ADDENDUM #1	02/09/2025
1	ISSUED FOR BIDDING	01/29/2026

PROJECT NO: 20251200
DRAWN BY: ML
CHECKED BY: DA

COPYRIGHT:
All plans, specifications, computer files, field data, notes and other documents and instruments prepared by EAPC as instruments of service shall remain the property of EAPC. EAPC shall retain all common law, statutory and other reserved rights, including the copyright there to.

STAMP

I hereby certify that this plan, specification, or report was prepared by me or under my direct supervision and that I am a duly Registered Architect under the laws of the State of North Dakota.

Signature:

Date: 02/09/2026 REG. NO. 1718

Drawing Title
ENLARGED FLOOR PLANS AND INTERIOR ELEVATIONS

A504

Revit Version 2025
Plot Date: 2/9/2026 4:46:29 PM

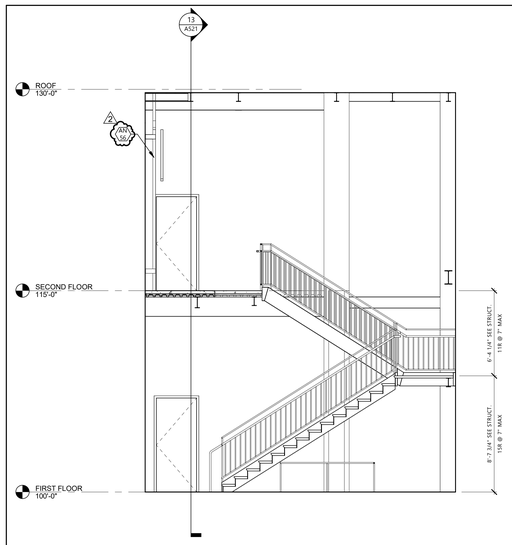

16 AS21 STAIR SECTION - NORTH
1/4" = 1'-0"

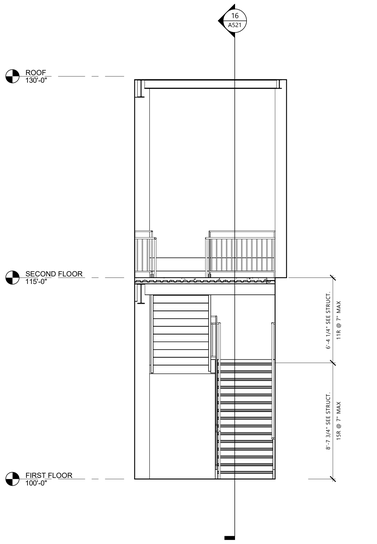

13 A521 Section 16
1/4" = 1'-0"

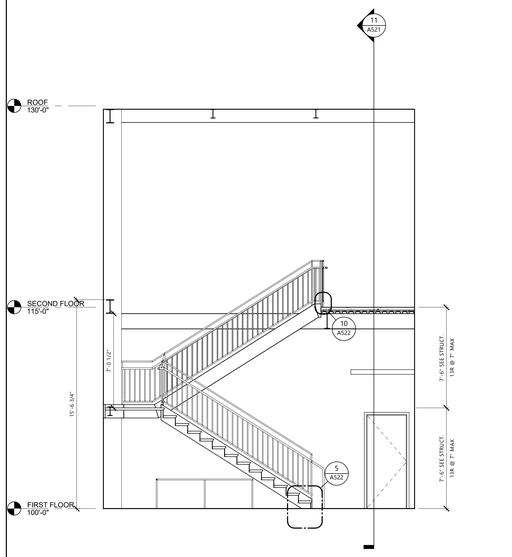

15 AS21 STAIR SECTION - SOUTH
1/4" = 1'-0"

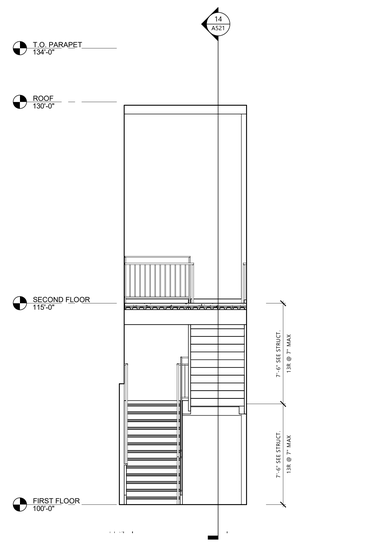

12 AS21 Section 14
1/4" = 1'-0"

14 AS21 STAIR SECTION - WEST
1/4" = 1'-0"

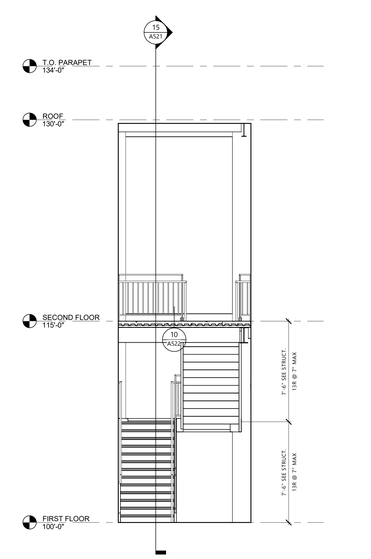

11 AS21 Section 15
1/4" = 1'-0"

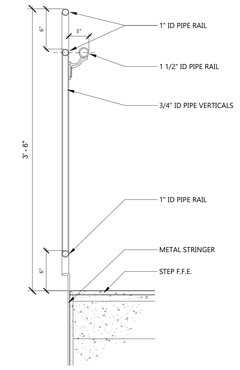

10 AS21 PIPE GUARDRAIL
1 1/2" = 1'-0"

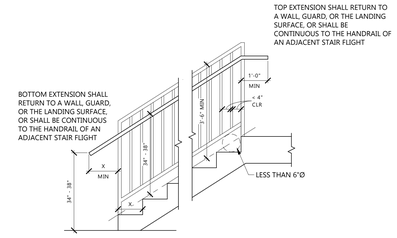

7 AS21 STAIR RAILING REQUIREMENTS
1/2" = 1'-0"

KEYNOTE LEGEND:

< < < INDICATES KEYNOTE ON PLAN

AN 56 WALL MOUNTED LADDER, PROVIDE IN WALL BLOCKING AS REQUIRED.

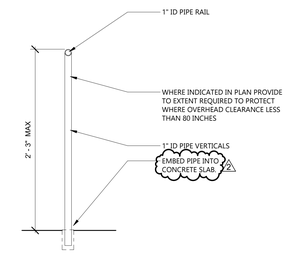

4 AS21 PIPE GUARDRAIL
1 1/2" = 1'-0"

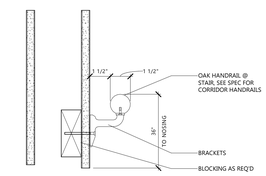

3 AS21 HANDRAIL DETAIL
3" = 1'-0"

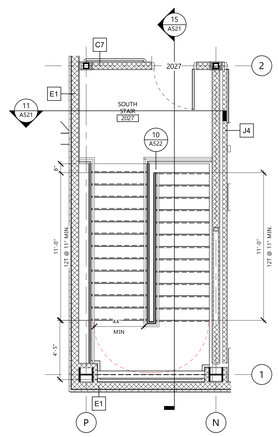

9 AS21 SOUTH STAIR PLAN - SECOND FLOOR
1/4" = 1'-0"

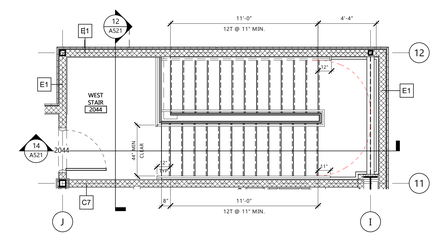

6 AS21 WEST STAIR PLAN - SECOND FLOOR
1/4" = 1'-0"

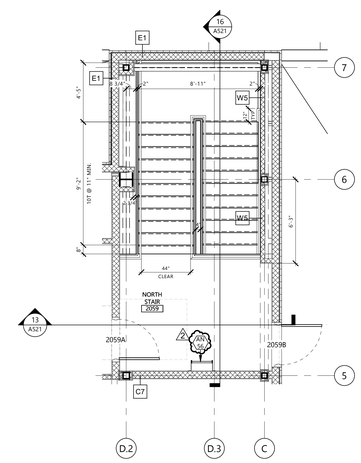

2 AS21 NORTH STAIR PLAN - SECOND FLOOR
1/4" = 1'-0"

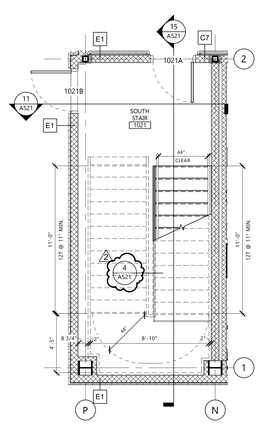

8 AS21 SOUTH STAIR PLAN - FIRST FLOOR
1/4" = 1'-0"

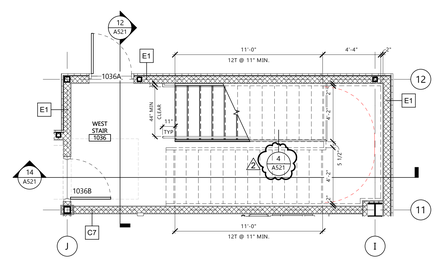

5 AS21 WEST STAIR PLAN - FIRST FLOOR
1/4" = 1'-0"

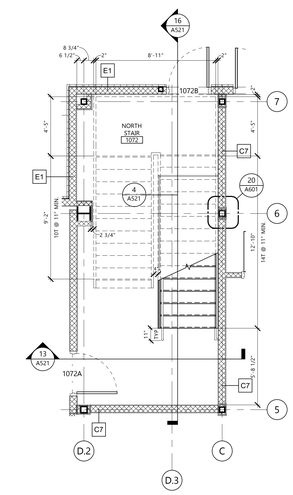

1 AS21 NORTH STAIR PLAN - FIRST FLOOR
1/4" = 1'-0"

EAPC
Architecture | Engineering
Interior Design | Industrial
TELEPHONE 701.258.3116
116 W. Main Ave., Suite A, Bismarck ND 58501
www.eapc.net

CONSULTANTS

CLIENT
VIBRA HOSPITALS OF THE CENTRAL DAKOTAS

PROJECT DESCRIPTION
BISMARCK REHABILITATION HOSPITAL

CITY BISMARCK
STATE NORTH DAKOTA

ISSUE DATES

MARK	DESCRIPTION	DATE
2	ADDENDUM #1	02/09/2025
1	ISSUED FOR BIDDING	01/29/2026

PROJECT NO: 20251200
DRAWN BY: SW
CHECKED BY: DA

COPYRIGHT:
All plans, specifications, computer files, field data, notes and other documents and instruments prepared by EAPC as instruments of service shall remain the property of EAPC. EAPC shall retain all common law, statutory and other reserved rights, including the copyright there to.

STAMP

I hereby certify that this plan, specification, or report was prepared by me or under my direct supervision and that I am a duly Registered Architect under the laws of the State of North Dakota.

Signature:

Date: 02/09/2026 REG. NO. 1718

Drawing Title
VERTICAL CIRCULATION PLANS, SECTIONS & DETAILS

A521

Revit Version: 2025
Print Date: 2/9/2026 4:46:19 PM

KEYNOTE LEGEND:

< < < INDICATES KEYNOTE ON PLAN

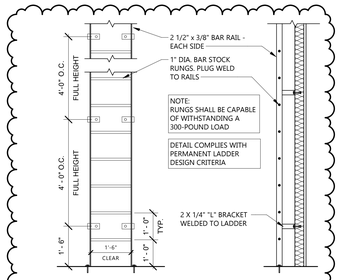

11 A522 ROOF ACCESS LADDER
1/2" = 1'-0"

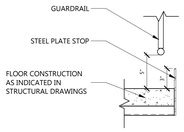

10 A522 SECTION - GUARDRAIL BASE @ FLOOR
1 1/2" = 1'-0"

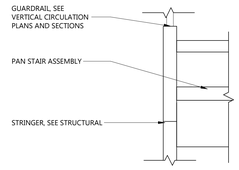

9 A522 SECTION - GAURDRAIL BASE @ STEEL STAIRS
1 1/2" = 1'-0"

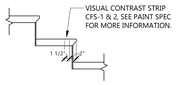

8 A522 VISUAL CONTRAST ON STAIRS
3/4" = 1'-0"

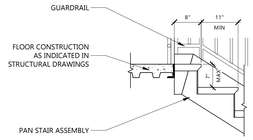

7 A522 STAIR TREAD/RISER DETAIL @ 2ND FLOOR
3/4" = 1'-0"

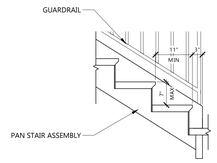

6 A522 STAIR TREAD/RISER DETAIL @ LANDING
3/4" = 1'-0"

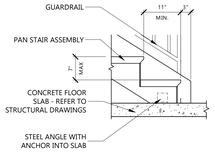

5 A522 STAIR TREAD/RISER DETAIL @ FLOOR
3/4" = 1'-0"

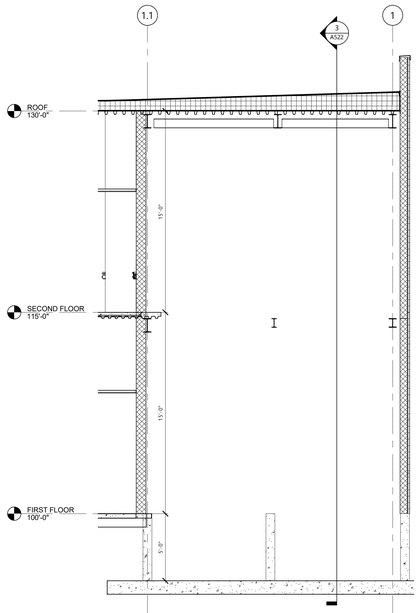

4 A522 ELEV SECTION 2
1/4" = 1'-0"

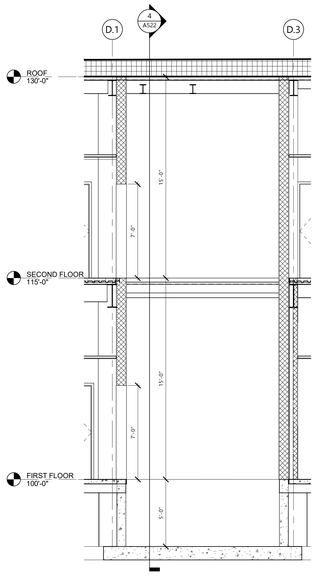

3 A522 ELEV SECTION 1
1/4" = 1'-0"

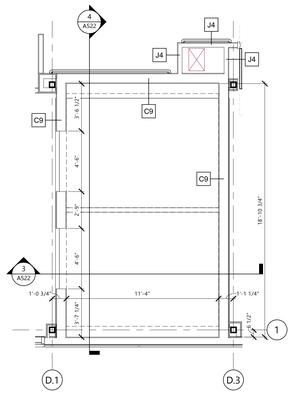

2 A522 ELEVATOR SF PLAN
1/4" = 1'-0"

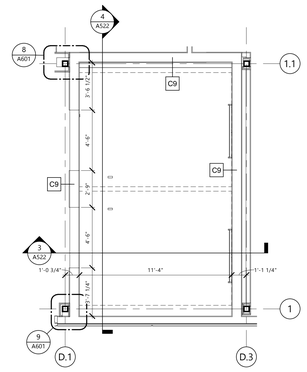

1 A522 ELEVATOR FF PLAN
1/4" = 1'-0"

EAPC
Architecture | Engineering
Interior Design | Industrial
TELEPHONE 701.258.3116
116 W. Main Ave., Suite A, Bismarck ND 58501
www.eapc.net

CONSULTANTS

CLIENT
VIBRA HOSPITALS OF THE CENTRAL DAKOTAS

PROJECT DESCRIPTION
BISMARCK REHABILITATION HOSPITAL

CITY BISMARCK
STATE NORTH DAKOTA

ISSUE DATES

MARK	DESCRIPTION	DATE
2	ADDENDUM #1	02/09/2025
1	ISSUED FOR BIDDING	01/29/2026

PROJECT NO: 20251200
DRAWN BY: SW
CHECKED BY: DA

COPYRIGHT:
All plans, specifications, computer files, field data, notes and other documents and instruments prepared by EAPC as instruments of service shall remain the property of EAPC. EAPC shall retain all common law, statutory and other reserved rights, including the copyright there to.

STAMP

I hereby certify that this plan, specification, or report was prepared by me or under my direct supervision and that I am a duly Registered Architect under the laws of the State of North Dakota.

Signature:

Date: 02/09/2026 REG. NO. 1718

Drawing Title
VERTICAL CIRCULATION PLANS, SECTIONS & DETAILS

A522

Revit Version: 2025
Plot Date: 02/20/2026 4:47:03 PM

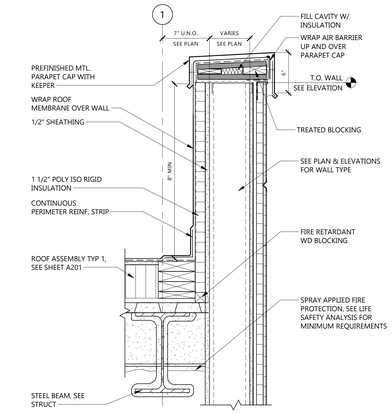

6 A602 TYPICAL PARRAPET DETAIL
1 1/2" = 1'-0"

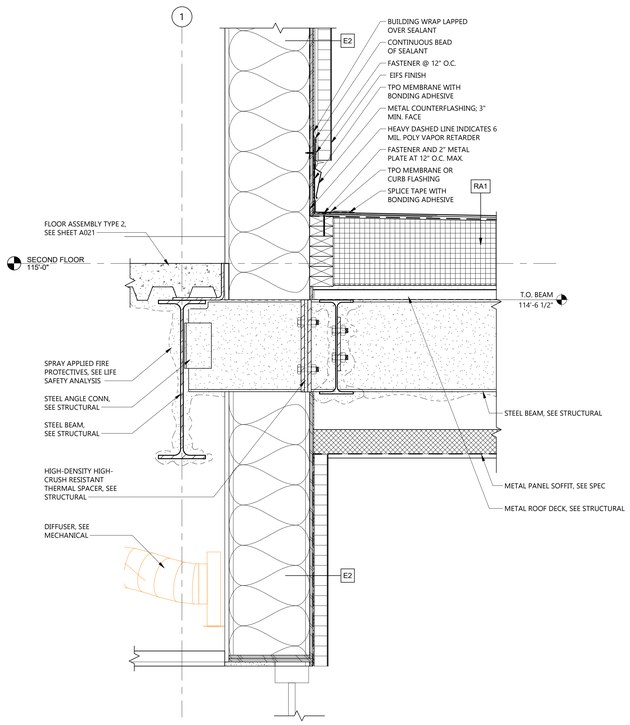

4 A602 ENTRY CANOPY CONNECTION
1 1/2" = 1'-0"

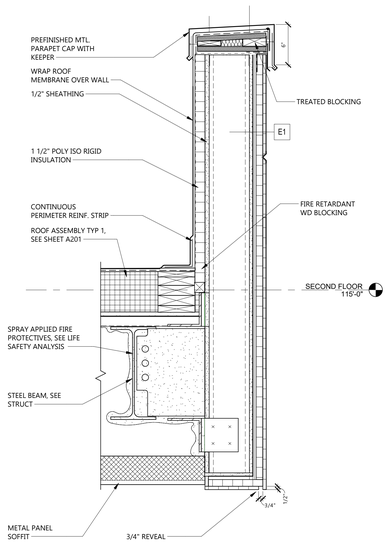

3 A602 PARAPET @ ENTRY CANOPY
1 1/2" = 1'-0"

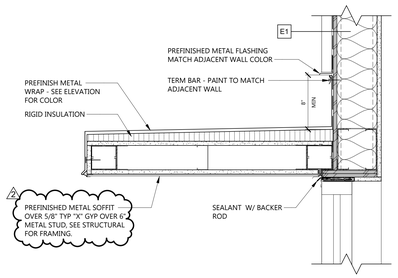

5 A602 TYPICAL CANOPY SECTION
1 1/2" = 1'-0"

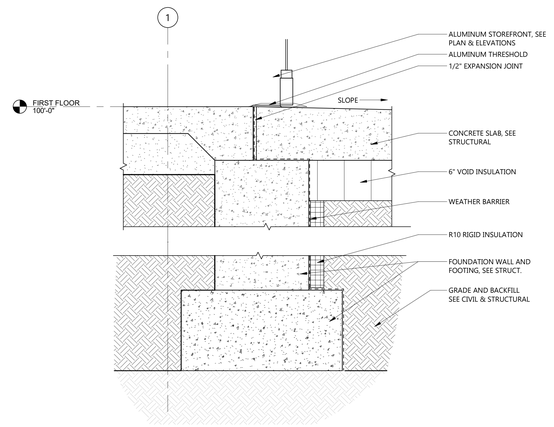

2 A602 TYPICAL STOOP DETAIL
1 1/2" = 1'-0"

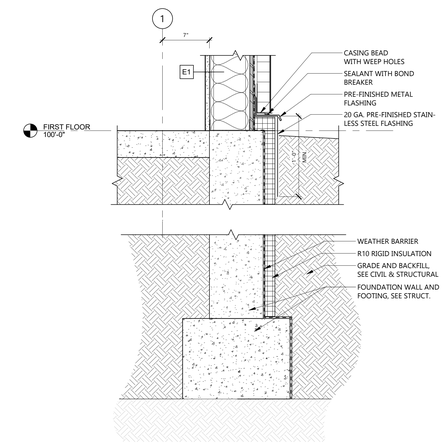

1 A602 E1 @ FOUNDATION WALL
1 1/2" = 1'-0"

EAPC
Architecture | Engineering
Interior Design | Industrial
TELEPHONE 701.258.3116
116 W. Main Ave., Suite A, Bismarck ND 58501
www.eapc.net

CONSULTANTS

CLIENT
VIBRA HOSPITALS OF THE CENTRAL DAKOTAS

PROJECT DESCRIPTION
BISMARCK REHABILITATION HOSPITAL

CITY BISMARCK
STATE NORTH DAKOTA

ISSUE DATES

MARK	DESCRIPTION	DATE
2	ADDENDUM #1	02/09/2025
1	ISSUED FOR BIDDING	01/29/2026

PROJECT NO: 20251200
DRAWN BY: JB
CHECKED BY: BD

COPYRIGHT:
All plans, specifications, computer files, field data, notes and other documents and instruments prepared by EAPC as instruments of service shall remain the property of EAPC. EAPC shall retain all common law, statutory and other reserved rights, including the copyright there to.

STAMP

I hereby certify that this plan, specification, or report was prepared by me or under my direct supervision and that I am a duly Registered Architect under the laws of the State of North Dakota.

Signature:

Date: 02/09/2026 REG. NO. 1718

Drawing Title
DETAILS - WALL SECTION

A602

Revit Version: 2025
Print Date: 2/12/2026 4:41:18 PM

DOOR SCHEDULE

DR #	ROOM NAME	DOOR PANEL(S) OPENING SIZE	DOOR PANEL(S) MATL	DOOR PANEL(S) TYPE	DOOR FRAME MATL	DOOR FRAME TYPE	FIRE RATING	HDWE GROUP	NOTES
1EL1	ELEVATOR #1	4'-6" x 7'-0"	BY MFR	BY MFR	BY MFR	BY MFR		BY MFR	
1EL2	ELEVATOR #2	4'-6" x 7'-0"	BY MFR	BY MFR	BY MFR	BY MFR		BY MFR	
2EL1	ELEVATOR #1	4'-6" x 7'-0"	BY MFR	BY MFR	BY MFR	BY MFR		BY MFR	
2EL2	ELEVATOR #2	4'-6" x 7'-0"	BY MFR	BY MFR	BY MFR	BY MFR		BY MFR	
102	GENERATOR ENCLOSURE	6'-0" x 7'-0"	HM	F	HM	HM-00		14	5
1001	ENTRY	12'-0" x 7'-5 3/4"	X	X	X	X	As Specified	13	5
1003	ENTRY	12'-0" x 7'-5 3/4"	X	X	X	X	As Specified	13	
1004	RESPIRATORY OFFICE	3'-0" x 7'-0"	WD	F	HM	HM-00		9	
1004A	RESPIRATORY STORAGE	3'-0" x 7'-0"	WD	F	HM	HM-00		7	
1005A	PATIENT SUITE	4'-0" x 7'-0"	WD	F	HM	HM-00		1	
1005B	BATH	3'-6" x 7'-0"	WD	F	HM	PAT		2	
1006	SOILED HOLDING	3'-0" x 7'-0"	WD	F	HM	HM-00	45 MIN	6	3
1007A	PATIENT SUITE	4'-0" x 7'-0"	WD	F	HM	HM-00		1	
1007B	BATH	3'-6" x 7'-0"	WD	F	HM	PAT		2	
1008	CASE MANAGEMENT OFFICE	3'-0" x 7'-0"	WD	F	HM	HM-00		9	
1009A	HIGH OBS ISO ENTRY	4'-0" x 7'-0"	WD	F	HM	HM-00		3	
1009B	HIGH OBS ISO ENTRY	4'-0" x 7'-0"	WD	F	HM	HM-00		3	
1009C	BATH	3'-0" x 7'-0"	WD	F	HM	HM-00		4	
1010	CLEAN SUPPLY	3'-0" x 7'-0"	WD	F	HM	HM-00	45 MIN	6	3
1011A	HIGH OBS PATIENT SUITE	4'-0" x 7'-0"	WD	FG	HM	HM-02		1	
1011B	BATH	3'-6" x 7'-0"	WD	F	HM	PAT		2	
1013A	HIGH OBS PATIENT SUITE	4'-0" x 7'-0"	WD	FG	HM	HM-02		1	
1013B	BATH	3'-6" x 7'-0"	WD	F	HM	PAT		2	
1014	NURSE OFFICE	3'-0" x 7'-0"	WD	F	HM	HM-00		8	
1015A	HIGH OBS PATIENT SUITE	4'-0" x 7'-0"	WD	FG	HM	HM-02		1	
1015B	BATH	3'-6" x 7'-0"	WD	F	HM	PAT		2	
1016A	TELEMETRY	3'-0" x 7'-0"	WD	F	HM	HM-00		6	3
1017A	HIGH OBS PATIENT SUITE	4'-0" x 7'-0"	WD	FG	HM	HM-02		1	
1017B	HIGH OBS PATIENT SUITE	3'-6" x 7'-0"	WD	F	HM	PAT		2	
1018A	MED	3'-0" x 7'-0"	WD	F	HM	HM-00		6	3
1018B	MED	3'-0" x 7'-0"	WD	F	HM	HM-00		6	3
1019A	HIGH OBS PATIENT SUITE	4'-0" x 7'-0"	WD	FG	HM	HM-02		1	
1019B	BATH	3'-6" x 7'-0"	WD	F	HM	PAT		2	
1020	STAFF RR	3'-0" x 7'-0"	WD	F	HM	HM-00		5	
1021A	SOUTH STAIR	3'-0" x 7'-0"	HM	NV	HM	HM-00	45 MIN	15	
1021B	SOUTH STAIR	3'-0" x 7'-0"	HM	NV	HM	HM-00	45 MIN	16	5
1022A	PATIENT SUITE	4'-0" x 7'-0"	WD	F	HM	HM-00		1	
1022B	BATH	3'-6" x 7'-0"	WD	F	HM	PAT		2	
1023A	SOUTH CORRIDOR	7'-0" x 7'-0"	HM	F	HM	HM-DE-00		18	1,4
1023B	SOUTH CORRIDOR	4'-0" x 7'-0"	NV	F	HM	HM-00		17	3,5
1024A	PATIENT SUITE	4'-0" x 7'-0"	WD	F	HM	HM-00		1	
1024B	BATH	3'-6" x 7'-0"	WD	F	HM	PAT		2	
1025A	BARIA/ISO PATIENT SUITE	4'-8" x 7'-0"	WD (WD)	F (F)	HM	HM-00		21	2
1025B	BATH	3'-6" x 7'-0"	WD	F	HM	PAT		2	
1026A	PATIENT SUITE	4'-0" x 7'-0"	WD	F	HM	HM-00		1	
1026B	BATH	3'-6" x 7'-0"	WD	F	HM	PAT		2	
1027A	PATIENT SUITE	4'-0" x 7'-0"	WD	F	HM	HM-00		1	
1027B	BATH	3'-6" x 7'-0"	WD	F	HM	PAT		2	
1028A	PATIENT SUITE	4'-0" x 7'-0"	WD	F	HM	HM-00		1	
1028B	BATH	3'-6" x 7'-0"	WD	F	HM	PAT		2	
1029A	PATIENT SUITE	4'-0" x 7'-0"	WD	F	HM	HM-00		1	
1029B	BATH	3'-6" x 7'-0"	WD	F	HM	PAT		2	
1030A	PATIENT SUITE	4'-0" x 7'-0"	WD	F	HM	HM-00		1	
1030B	BATH	3'-6" x 7'-0"	WD	F	HM	PAT		2	
1031A	PATIENT SUITE	4'-0" x 7'-0"	WD	F	HM	HM-00		1	
1031B	BATH	3'-6" x 7'-0"	WD	F	HM	PAT		2	
1032A	PATIENT SUITE	4'-0" x 7'-0"	WD	F	HM	HM-00		1	
1032B	BATH	3'-6" x 7'-0"	WD	F	HM	PAT		2	
1033A	PATIENT SUITE	4'-0" x 7'-0"	WD	F	HM	HM-00		1	
1033B	BATH	3'-6" x 7'-0"	WD	F	HM	PAT		2	
1034A	PATIENT SUITE	4'-0" x 7'-0"	WD	F	HM	HM-00		1	
1034B	BATH	3'-6" x 7'-0"	WD	F	HM	PAT		2	
1035	VAC PUMP	6'-0" x 7'-0"	2 HM	F	2 HM	HM-10		19	1,5
1036A	WEST STAIR	3'-0" x 7'-0"	HM	NV	HM	HM-10		16	5
1036B	WEST STAIR	3'-0" x 7'-0"	HM	NV	HM	HM-00	45 MIN	15	
1037	MED GAS	6'-0" x 7'-0"	2 HM	F	2 HM	HM-10		20	1,3,5
1038	EVS	3'-0" x 7'-0"	WD	F	HM	HM-00		7	
1039A	WEST CORRIDOR	3'-8" x 7'-0"	2 HM	NV	2 HM	HM-10		17	3,5
1040		3'-0" x 7'-0"	HM	F	HM	HM-00m			
1040A	DAY ROOM	4'-0" x 7'-0"	WD	FG	HM	HM-03		10	
1040B	DAY ROOM	4'-0" x 7'-0"	NV	HM	HM	HM-04		17	3,5
1041	MEN'S RR	3'-0" x 7'-0"	WD	F	HM	HM-00		12	
1042	ADMISSIONS	3'-0" x 7'-0"	WD	F	HM	HM-00		9	
1043	WOMEN'S RR	3'-0" x 7'-0"	WD	F	HM	HM-00		12	
1044A	STAFF LOUNGE	3'-0" x 7'-0"	WD	F	HM	HM-00		9	
1044B	RR	3'-0" x 7'-0"	WD	F	HM	HM-00		5	
1045	MARKETING	3'-0" x 7'-0"	WD	F	HM	HM-00		9	
1046	DOCTOR'S LOUNGE	3'-0" x 7'-0"	WD	F	HM	HM-00		9	
1047	OASIS	3'-0" x 7'-0"	WD	F	HM	HM-00		5	
1048	MACHINE ROOM	3'-0" x 7'-0"	WD	F	HM	HM-00		7	
1049	WELLNESS	3'-0" x 7'-0"	WD	F	HM	HM-00		5	
1050A	NORTH CORRIDOR	6'-0" x 7'-0"	WD	F	HM	HM-00		25	1
1050B	ADMIN CORRIDOR	6'-0" x 7'-0"	WD	F	HM	HM-00		25	1
1051	EVS	3'-0" x 7'-0"	WD	F	HM	HM-00		7	
1053	STAFF RR	3'-0" x 7'-0"	WD	F	HM	HM-00		5	
1056A	NORTH CORRIDOR	6'-0" x 7'-0"	WD	F	HM	HM-00	45 MIN	25	1
1056B	OUTDOOR DINING	4'-0" x 7'-0"	WD	FG	HM	HM-05		17	3,5
1057	HR	3'-0" x 7'-0"	WD	F	HM	HM-00		8	
1058	CONF. ROOM	3'-0" x 7'-0"	WD	F	HM	HM-00		4	
1059	SOCIAL	3'-0" x 7'-0"	WD	F	HM	HM-00		8	
1060A	HALL	3'-0" x 7'-0"	HG	F	HM	HM-00		10	
1060B	HALL	3'-0" x 7'-0"	HG	F	HM	HM-00		10	
1061	CCO	3'-0" x 7'-0"	WD	F	HM	HM-00		8	
1063	MED DIR.	3'-0" x 7'-0"	WD	F	HM	HM-00		8	
1064	MED OFFICE	3'-0" x 7'-0"	WD	F	HM	HM-00		6	3
1065	DQM	3'-0" x 7'-0"	WD	F	HM	HM-00		8	
1067	CEO	3'-0" x 7'-0"	WD	F	HM	HM-00		8	
1068	EMERG. ELEC.	3'-0" x 7'-0"	WD	F	HM	HM-00		7	5
1069A	ELEC	3'-0" x 7'-0"	WD	F	HM	HM-00		7	
1069B	ELEC	3'-0" x 7'-0"	WD	F	HM	HM-00		22	
1071	LOADING/RECIEVING	6'-0" x 7'-0"	HM	NV	HM	HM-00		27	1,3,5
1072A	NORTH STAIR	3'-0" x 7'-0"	HM	NV	HM	HM-00	45 MIN	15	
1072B	NORTH STAIR	3'-0" x 7'-0"	WD	F	HM	HM-00		16	5
1073	IT ROOM	3'-0" x 7'-0"	WD	F	HM	HM-00		6	3
1074	RECEIVING ALCOVE	6'-0" x 7'-0"	WD	F	HM	HM-00		25	1
1075A	SOIL	3'-0" x 7'-0"	WD	F	HM	HM-00	45 MIN	7	
1075B	SOIL	3'-0" x 7'-0"	HM	NV	HM	HM-10		17	3,5
1076A	BOILER	3'-0" x 7'-0"	WD	F	HM	HM-00	45 MIN	7	
1076B	BOILER	4'-0" x 7'-0"	WD	F	HM	HM-00		22	5
1077	WOMEN'S RR	3'-0" x 7'-0"	WD	F	HM	HM-00		5	
1078	GEN STORAGE	6'-0" x 7'-0"	WD	F	HM	HM-00	45 MIN	26	1,3
1079	MEN'S RR	3'-0" x 7'-0"	WD	F	HM	HM-00		5	
1080	ENG OFF / SUPPLY	3'-0" x 7'-0"	WD	F	HM	HM-00	45 MIN	9	
1082A	NORTH CORRIDOR	4'-0" x 7'-0"	WD	F	HM	HM-00	45 MIN	10	
1082B	KITCHEN	6'-0" x 7'-0"	WD	F	HM	HM-00	45 MIN	28	
1084	DIETARY OFFICE	3'-0" x 7'-0"	WD	F	HM	HM-00		8	
1086	KITCHEN	3'-0" x 7'-0"	WD	F	HM	HM-00		4	
1087	STORAGE	3'-0" x 7'-0"	WD	F	HM	HM-00		7	
1088	KITCHEN	4'-0" x 7'-0"	WD	F	HM	HM-00		4	
1090	CLEAN DISH	4'-0" x 7'-0"	WD	F	HM	HM-00		4	

DOOR SCHEDULE

DR #	ROOM NAME	DOOR PANEL(S) OPENING SIZE	DOOR PANEL(S) MATL	DOOR PANEL(S) TYPE	DOOR FRAME MATL	DOOR FRAME TYPE	FIRE RATING	HDWE GROUP	NOTES
2000	CASE MANAGEMENT OFFICE	3'-0" x 7'-0"	WD	F	HM	HM-00	20 MIN	9	
2001A	ADL	3'-0" x 7'-0"	WD	F	HM	HM-00	20 MIN	10	
2001B	ADL	6'-0" x 7'-0"	WD	BF	WD	WD-00		11	
2001C	ADL RR	3'-0" x 7'-0"	WD	F	HM	HM-00		5	
2002A	PATIENT SUITE	4'-0" x 7'-0"	WD	F	HM	HM-00		1	
2002B	BATH	3'-6" x 7'-0"	WD	F	HM	PAT		2	
2003A	PATIENT SUITE	4'-0" x 7'-0"	WD	F	HM	HM-00		1	
2003B	BATH	3'-6" x 7'-0"	WD	F	HM	PAT		2	
2004A	PATIENT SUITE	4'-0" x 7'-0"	WD	F	HM	HM-00		1	
2004B	BATH	3'-6" x 7'-0"	WD	F	HM	PAT		2	
2005A	PATIENT SUITE	4'-0" x 7'-0"	WD	F	HM	HM-00		1	
2005B	BATH	3'-6" x 7'-0"	WD	F	HM	PAT		2	
2006A	PATIENT SUITE	4'-0" x 7'-0"	WD	F	HM	HM-00		1	
2006B	BATH	3'-6" x 7'-0"	WD	F	HM	PAT		2	
2007A	PATIENT SUITE	4'-0" x 7'-0"	WD	F	HM	HM-00		1	
2007B	BATH	3'-6" x 7'-0"	WD	F	HM	PAT		2	
2008A	PATIENT SUITE	4'-0" x 7'-0"	WD	F	HM	HM-00		1	
2008B	BATH	3'-6" x 7'-0"	WD	F	HM	PAT		2	
2009A	PATIENT SUITE	4'-0" x 7'-0"	WD	F	HM	HM-00		1	
2009B	BATH	3'-6" x 7'-0"	WD	F	HM	PAT		2	
2010A	PATIENT SUITE	4'-0" x 7'-0"	WD	F	HM	HM-00		1	
2010B	BATH	3'-6" x 7'-0"	WD	F	HM	PAT		2	
2011A	PATIENT SUITE	4'-0" x 7'-0"	WD	F	HM	HM-00		1	
2011B	BATH	3'-6" x 7'-0"	WD	F	HM	PAT		2	
2012	STAFF RR	3'-0" x 7'-0"	WD	F	HM	HM-00		5	
2013A	PATIENT SUITE	4'-0" x 7'-0"	WD	F	HM	HM-00		1	
2013B	BATH	3'-6" x 7'-0"	WD	F	HM	PAT		2	
2015A	PATIENT SUITE	4'-0" x 7'-0"	WD	F	HM	HM-00		1	
2015B	BATH	3'-6" x 7'-0"	WD	F	HM	PAT		2	
2016	EVS	3'-0" x 7'-0"	WD	F	HM	HM-00		7	
2017A	PATIENT SUITE	4'-0" x 7'-0"	WD	F	HM	HM-00		1	
2017B	BATH	3'-6" x 7'-0"	WD	F	HM	PAT		2	
2018	SOILED HOLDING	3'-0" x 7'-0"	WD	F	HM	HM-00	45 MIN	6	3
2019A	PATIENT SUITE	4'-0" x 7'-0"	WD	F	HM	HM-00		1	
2019B	BATH	3'-6" x 7'-0"	WD	F	HM	PAT		2	
2020	CLEAN HOLDING	3'-0" x 7'-0"	WD	F	HM	HM-00	45 MIN	6	3
2021A	PATIENT SUITE	4'-0" x 7'-0"	WD	F	HM	HM-00		1	
2021B	BATH	3'-6" x 7'-0"	WD	F	HM	PAT		2	
2023A	PATIENT SUITE	4'-0" x 7'-0"	WD	F	HM	HM-00		1	
2023B	BATH	3'-6" x 7'-0"	WD	F	HM	PAT		2	
2024	NURSE OFFICE	3'-0" x 7'-0"	WD	F	HM	HM-00		8	
2025A	PATIENT SUITE	4'-0" x 7'-0"	WD	F	HM	HM-00		1	
2025B	BATH	3'-6" x 7'-0"	WD	F	HM	PAT		2	
2026A	MED	3'-0" x 7'-0"	WD	F	HM	HM-00		6	3
2026B	MED	3'-0" x 7'-0"	WD	F	HM	HM-00		6	3
2027	SOUTH STAIR	3'-0" x 7'-0"	HM	NV	HM	HM-00	45 MIN	15	
2028A	PATIENT SUITE	4'-0" x 7'-0"	WD	F	HM	HM-00		1	
2028B	BATH	3'-6" x 7'-0"	WD	F	HM	PAT		2	
2029	NORTH CORRIDOR	7'-0" x 7'-0"	HM	F	HM	HM-DE-00		18	1,4
2030A	PATIENT SUITE	4'-0" x 7'-0"	WD	F	HM	HM-00		1	
2030B	BATH	3'-6" x 7'-0"	WD	F	HM	PAT		2	
2032A	PATIENT SUITE	4'-0" x 7'-0"	WD	F	HM	HM-00		1	
2032B	BATH	3'-6" x 7'-0"	WD	F	HM	PAT		2	
2033A	BARIA/ISO PATIENT SUITE	4'-8" x 7'-0"	WD (WD)	F (F)	HM	HM-00		21	2
2033B	BATH	3'-6" x 7'-0"	WD	F	HM	PAT		2	
2034A	PATIENT SUITE	4'-0" x 7'-0"	WD	F	HM	HM-00		1	
2034B	BATH	3'-6" x 7'-0"	WD	F	HM	PAT		2	
2035A	PATIENT SUITE	4'-0" x 7'-0"	WD	F	HM	HM-00		1	
2035B	BATH	3'-6" x 7'-0"	WD	F	HM	PAT		2	
2036A	PATIENT SUITE	4'-0" x 7'-0"	WD	F	HM	HM-00		1	
2036B	BATH	3'-6" x 7'-0"	WD	F	HM	PAT		2	
2037A	PATIENT SUITE	4'-0" x 7'-0"	WD	F	HM	HM-00		1	
2037B	BATH	3'-6" x 7'-0"	WD	F	HM	PAT		2	
2038A	PATIENT SUITE	4'-0" x 7'-0"	WD	F	HM	HM-00		1	
2038B	BATH	3'-6" x 7'-0"	WD	F	HM	PAT		2	
2039A	PATIENT SUITE	4'-0" x 7'-0"	WD	F	HM	HM-00		1	
2039B	BATH	3'-6" x 7'-0"	WD	F	HM	PAT		2	
2040A	PATIENT SUITE	4'-0" x 7'-0"	WD	F	HM	HM-00		1	
2040B	BATH	3'-6" x 7'-0"	WD	F	HM	PAT		2	
2041A	ISO PATIENT ENTRY	4'-0" x 7'-0"	WD	F	HM	HM-00		3	
2041B	ISO PATIENT	4'-0" x 7'-0"	WD	F	HM	HM-00		3	
2041C	BATH	3'-0" x 7'-0"	WD	F	HM	HM-00		4	
2042A	PATIENT SUITE	4'-0" x 7'-0"	WD	F	HM	HM-00		1	
2042B	BATH	3'-6" x 7'-0"	WD	F	HM	PAT		2	
2043	ELEVATOR LOBBY	6'-0" x 7'-0"	WD	F	HM	HM-00		24	1
2044	WEST STAIR	3'-0" x 7'-0"	HM	NV	HM	HM-00	45 MIN	15	
2047	WOUND CARE OFFICE	3'-0" x 7'-0"	WD	F	HM	HM-00		9	
2048A	SPEECH	3'-0" x 7'-0"	WD	F	HM	HM-00		10	
2048B	STOR	3'-0" x 7'-0"	WD	F	HM	HM-00		7	
2049	DIALYSIS SUITE	3'-0" x 7'-0"	WD	F	HM	HM-00		6	3
2050	CHARTING ROOM	3'-0" x 7'-0"	WD	F	HM	HM-00		8	
2051A	NORTH CORRIDOR	3'-0" x 7'-0"	WD	F	HM	HM-00		10	
2051B	STAFF RR	3'-0" x 7'-0"	WD	F	HM	HM-00		5	
2052A	THERAPY GYM	6'-0" x 7'-0"	WD	F	HM	HM-00		25	1
2052B	THERAPY GYM	3'-0" x 7'-0"	WD	F	HM	HM-00		10	
2052C	STOR.	3'-0" x 7'-0"	WD	F	HM	HM-00		7	
2053	IT	3'-0" x 7'-0"	WD	F	HM	HM-00		6	3
2054	EXAM ROOM	3'-0" x 7'-0"	WD	F	HM	HM-00		4	
2055	ELEC	3'-0" x 7'-0"	WD	F	HM	HM-00		7	
2056	PHARMACY	3'-0" x 7'-0"	WD	F	HM	HM-00	45 MIN	6	3
2057	STORAGE	3'-0" x 7'-0"	WD	F	HM	HM-00		7	
2058	ANTEROOM	3'-0" x 7'-0"	WD	F	HM	HM-00		23	
2059A	NORTH STAIR	3'-0" x 7'-0"	HM	NV	HM	HM-00	45 MIN	15	
2059B	NORTH STAIR	3'-0" x 7'-0"	HM	F	HM	HM-00		22	5
2060	LAMINAR FLOW ROOM	3'-0" x 7'-0"	WD	F	HM	HM-00		23	
2061	SOILED STORAGE	3'-0" x 7'-0"	WD	F	HM	HM-00	45 MIN	7	
2062	STAFF RR	3'-0" x 7'-0"	WD	F	HM	HM-00		5	
2063	EQUIPMENT & CLEAN STORAGE	3'-0" x 7'-0"	WD	F	HM	HM-00	45 MIN	7	
2064	DAY ROOM	4'-0" x 7'-0"	WD	FG	HM	HM-01		10	
Grand total: 219									

DOOR NOTES

1. DOUBLE DOOR
2. UNEVEN PAIR
3. CARD READER REQUIRED. REFFER TO ELECTRICAL
4. SMOKE COMPARTMENT DOOR
5. EXTERIOR DOOR

- PROVIDE WEATHER GASKETING AT ALL EXTERIOR DOORS
- PROVIDE EXTERIOR-GRADE HARDWARE AT ALL EXTERIOR DOORS

TYPICAL GLAZING TYPE CODES

VERIFY WITH ARCHITECT / INTERIOR DESIGNER BEFORE USING TYPE CODES IN LIEU OF DESCRIPTIONS. TYPE CODES ARE USED IN CONJUNCTION WITH SPECLINK.

COORDINATE ALL GLAZING TYPES WITH SECTION 08 8000 - GLAZING.

SINGLE PANE GLAZING

G-2 SINGLE PANE 1/4" TEMPERED SAFETY GLASS

INSULATING GLAZING

IG-11 DOUBLE-PANED - CLEAR ANNEALED GLASS
IG-20 DOUBLE-PANED - CLEAR TEMPERED GLASS
IG-30 DOUBLE-PANED SPANDREL GLASS

FIRE-RATED GLAZING - COORD. W/ SECTION 08 8813

FRG-1 FIRE-RESISTANCE -RATED GLAZING
FPG-1 FIRE PROTECTION-RATED GLAZING

DOOR HARDWARE GROUPS

GROUP 1 (PATIENT ROOM)
HOSPITAL LATCH
HINGES
KICKPLATE
MOP PLATE
SEALS
WALL STOP

GROUP 2 (PATIENT RESTROOM)
HARDWARE BY DOOR MANUFACTURER

GROUP 3 (ISO PATIENT ROOM)
HOSPITAL LATCH
HINGES
CLOSER
KICKPLATE
MOP PLATE
SEALS

GROUP 4 (PASSAGE)
PASSAGE LEVERSET
HINGES
WALL STOP

GROUP 5 (PRIVACY)
PRIVACY LATCHSET WITH INDICATOR
HINGES
CLOSER
SEALS

GROUP 6 (SECURE)
STOREROOM LOCKSET
HINGES
CLOSER
SILENCERS
ELECTRIC STRIKE
CARD READER BY OTHERS

GROUP 7 (STOREROOM)
STOREROOM LOCKSET
HINGES
SILENCERS
WALL STOP

GROUP 8 (OFFICE)
OFFICE LOCKSET
HINGES
SILENCERS
WALL STOP

GROUP 9 (OFFICE SB)
OFFICE LOCKSET
HINGES
SMOKE GASKETING
WALL STOP

GROUP 10 (PASSAGE SB)
PASSAGE LEVERSET
HINGES
SMOKE GASKETING
WALL STOP

GROUP 11 (CLOSET)
BI-FOLD DOOR HARDWARE
WITH WIRE PULLS

GROUP 12 (RESTROOMS)
PASSAGE LEVERSET
HINGES
SMOKE GASKETING
CLOSER

GROUP 13 (ENTRY)
HANDICAP OPERATOR
MFR. STANDARD ALUMINUM SLIDING DOOR HDWE

GROUP 14 (GENERATOR ENCLOSURE)
STAINLESS STEEL
EXTERIOR GRADE LOCKSET
DROP PIN

GROUP 15 (STAIRWELL)
HINGES
CRASH BAR
PASSAGE LEVER
CLOSER
KICKPLATE
SEALS

GROUP 16 (STAIR TO EXT)
HINGES
CRASH BAR
NO EXTERIOR LEVER
CLOSER
KICKPLATE
SEALS
DOOR SWEEP

GROUP 17 (STAFF ENTRY)
HINGES
CRASH BAR
STOREROOM LEVER
CLOSER
KICKPLATE
SEALS
ELECTRIC STRIKE
CARD READER BY OTHERS

GROUP 18 (SMOKE COMPARTMENT)
HINGES
CRASH BARS EA LEAF
PASSAGE LEVER EA LEAF
CLOSER EA LEAF
KICKPLATE EA LEAF
ASTRAGAL
MAGNETIC HOLD OPEN EA LEAF

GROUP 19 (EXTERIOR MAINTENANCE)
HINGES
STOREROOM LOCKSET W/ DUMMY LEVER
DOOR SWEEP EA LEAF
ASTRAGAL

GROUP 20 (EXTERIOR MAINTENANCE ELECT)
HINGES
STOREROOM LOCKSET W/ DUMMY LEVER
DOOR SWEEP EA LEAF
ASTRAGAL
ELECTRIC STRIKE
CARD READER BY OTHERS

GROUP 21 (BARIATRIC PATIENT ROOM)
HOSPITAL LATCH
HINGES
KICKPLATE EA LEAF
MOP PLATE EA LEAF
SEALS
WALL STOP EA LEAF
TOP AND BOTTOM FLUSH BOLTS INACTIVE LEAF

GROUP 22 (ROOF MAINT)
HINGES
STOREROOM LOCK (EXTERIOR)
KICK PLATE
CLOSER
DOOR SWEEP
WEATHER GASKETING

GROUP 23 (PHARMACY)
HINGES
PASSAGE LEVERSET
KICK PLATE
CLOSER
SEALS

GROUP 24 (PASSAGE PAIR)
HINGES
PASSAGE LEVERSET

GROUP 25 (PASSAGE PAIR SB)
HINGES
PASSAGE LEVERSET
KICK PLATE
ASTRAGAL
SEALS

GROUP 26 (STORAGE PAIR)
HINGES
STOREROOM LOCKSET
KICK PLATE EA LEAF
ASTRAGAL
SEALS
CLOSER EA LEAF
ELECTRIC STRIKE
CARD READER BY OTHERS

GROUP 27 (LOADING DOCK)
HINGES
STOREROOM LOCKSET
KICK PLATE EA LEAF
ASTRAGAL
WEATHER GASKETING
CLOSER EA LEAF
DOOR SWEEP EA LEAF
ELECTRIC STRIKE
CARD READER BY OTHERS

GROUP 28 (RATED PAIR)
HINGES
PASSAGE LEVERSET
KICK PLATE EA LEAF
ASTRAGAL
SEALS

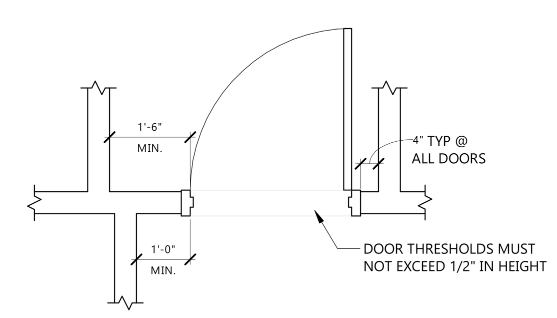

1 A801 ADA DOOR CLEARANCES
1/2" = 1'-0"

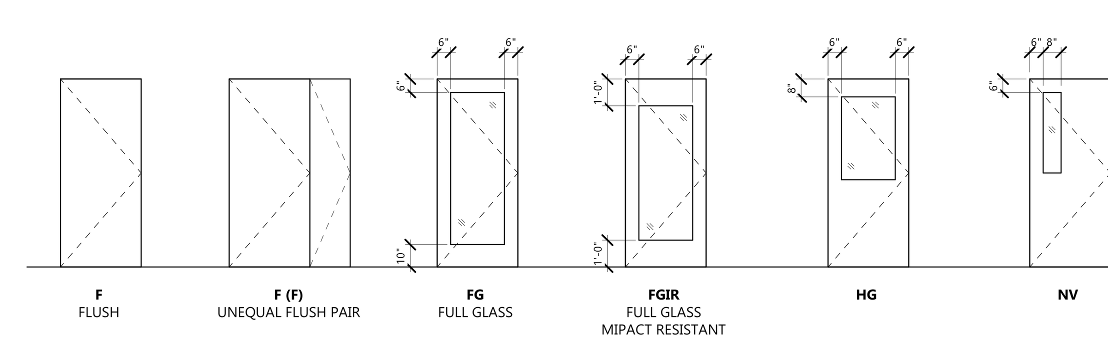

DOOR PANEL TYPES

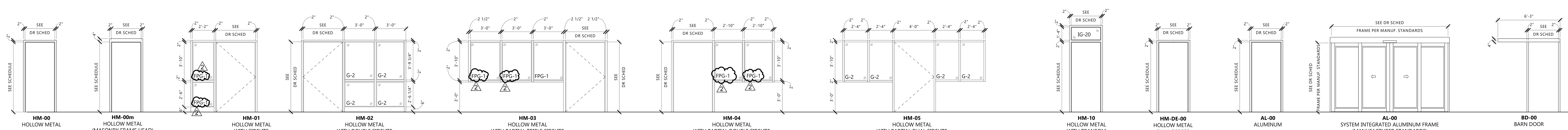

DOOR FRAME TYPES

Revit Version: 2025
Plot Date: 2/9/2026 2:06:22 PM

EAPC
Architecture | Engineering
Interior Design | Industrial
TELEPHONE 701.258.3116
116 W. Main Ave., Suite A, Bismarck ND 58501
www.eapc.net

CONSULTANTS

CLIENT
VIBRA HOSPITALS OF THE CENTRAL DAKOTAS

PROJECT DESCRIPTION
BISMARCK REHABILITATION HOSPITAL

CITY BISMARCK
STATE NORTH DAKOTA

ISSUE DATES

MARK	DESCRIPTION	DATE
2	ADDENDUM #1	02/09/2025
1	ISSUED FOR BIDDING	01/29/2026

PROJECT NO: 20251200
DRAWN BY: JB
CHECKED BY: DA

COPYRIGHT:
All plans, specifications, computer files, field data, notes and other documents and instruments prepared by EAPC as instruments of service shall remain the property of EAPC. EAPC shall retain all common law, statutory and other reserved rights, including the copyright there to.

STAMP

I hereby certify that this plan, specification, or report was prepared by me or under my direct supervision and that I am a duly Registered Architect under the laws of the State of North Dakota.
Signature:
Date: 02/09/2026 REG. NO. : 1718

Drawing Title
DOOR SCHEDULE, DOOR AND WINDOW ELEVATIONS

A801

TYPICAL GLAZING TYPE CODES

VERIFY WITH ARCHITECT / INTERIOR DESIGNER BEFORE USING TYPE CODES IN LIEU OF DESCRIPTIONS. TYPE CODES ARE USED IN CONJUNCTION WITH SPECLINK.

COORDINATE ALL GLAZING TYPES WITH SECTION 08 8000 - GLAZING.

SINGLE PANE GLAZING

G-2 SINGLE PANE 1/4" TEMPERED SAFETY GLASS

INSULATING GLAZING

IG-11 DOUBLE-PANED - CLEAR ANNEALED GLASS
IG-20 DOUBLE-PANED - CLEAR TEMPERED GLASS
IG-30 DOUBLE-PANED SPANDREL GLASS

FIRE-RATED GLAZING - COORD. W/ SECTION 08 8813

FRG-1 FIRE-RESISTANCE -RATED GLAZING
FPG-1 FIRE PROTECTION-RATED GLAZING

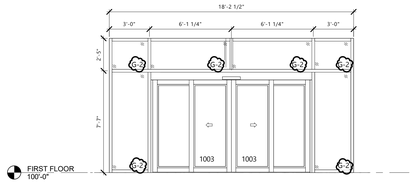

12 A802 GLAZING ELEVATION - SF 02
1/4" = 1'-0"

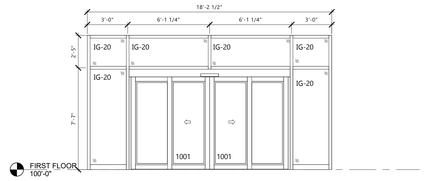

3 A802 GLAZING ELEVATION - SF 01
1/4" = 1'-0"

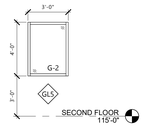

18 A802 GLAZING ELEV. - GL5
1/4" = 1'-0"

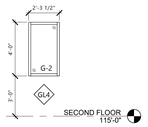

17 A802 GLAZING ELEV. - GL4
1/4" = 1'-0"

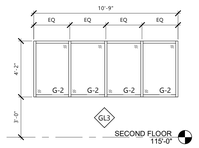

16 A802 GLAVING ELEV. - GL3
1/4" = 1'-0"

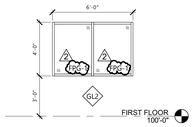

14 A802 GLAZING ELEV. - GL2
1/4" = 1'-0"

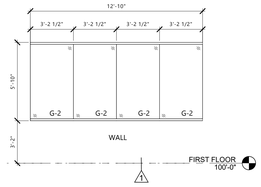

11 A802 GLAZING ELEV. - GL1
1/4" = 1'-0"

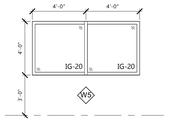

6 A802 GLAZING ELEV. - W5
1/4" = 1'-0"

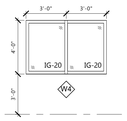

20 A802 GLAZING ELEV. - W4
1/4" = 1'-0"

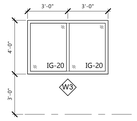

19 A802 GLAZING ELEV. - W3
1/4" = 1'-0"

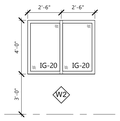

7 A802 GLAZING ELEV. - W2
1/4" = 1'-0"

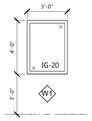

9 A802 GLAZING ELEV. - W1
1/4" = 1'-0"

EAPC

Architecture	Engineering
Interior Design	Industrial

TELEPHONE 701.258.3116
116 W. Main Ave., Suite A, Bismarck ND 58501
www.eapc.net

CONSULTANTS

CLIENT
VIBRA HOSPITALS OF THE CENTRAL DAKOTAS

PROJECT DESCRIPTION
BISMARCK REHABILITATION HOSPITAL

CITY BISMARCK
STATE NORTH DAKOTA

ISSUE DATES

MARK	DESCRIPTION	DATE
2	ADDENDUM #1	02/09/2025
1	ISSUED FOR BIDDING	01/29/2026

PROJECT NO: 20251200
DRAWN BY: JB
CHECKED BY: DA

COPYRIGHT:
All plans, specifications, computer files, field data, notes and other documents and instruments prepared by EAPC as instruments of service shall remain the property of EAPC. EAPC shall retain all common law, statutory and other reserved rights, including the copyright there to.

STAMP

I hereby certify that this plan, specification, or report was prepared by me or under my direct supervision and that I am a duly Registered Architect under the laws of the State of North Dakota.

Signature:

Date: 02/09/2026 REG. NO. : 1718

Drawing Title
DOOR SCHEDULE, DOOR AND WINDOW ELEVATIONS

A802

Revit Version 2022
Plot Date: 2/11/2026 2:06:22 PM

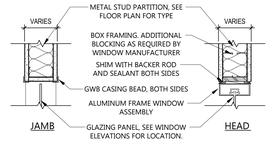

9 A821 DETAIL INTERIOR OPENING - WINDOW HEAD/JAMB @ METAL STUDS
1 1/2" = 1'-0"

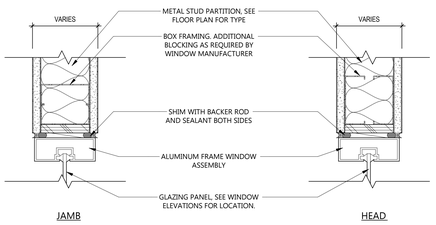

8 A821 DETAIL INTERIOR OPENING - WINDOW HEAD/JAMB @ METAL STUDS
3" = 1'-0"

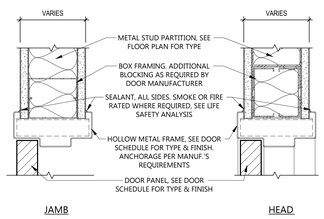

7 A821 DETAIL INTERIOR OPENING - HM DOOR HEAD/JAMB @ METAL STUDS
3" = 1'-0"

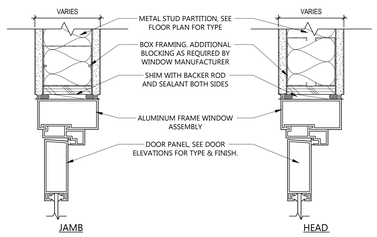

6 A821 DETAIL INTERIOR OPENING - AL DOOR HEAD/JAMB @ METAL STUDS
3" = 1'-0"

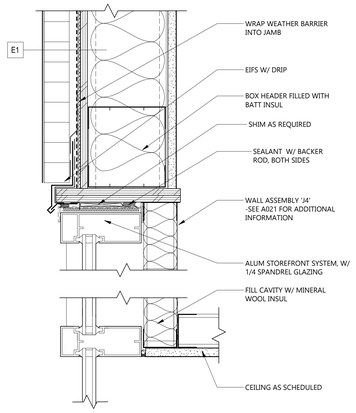

5 A821 ALUM HEAD DETAIL - SPANDREL
3" = 1'-0"

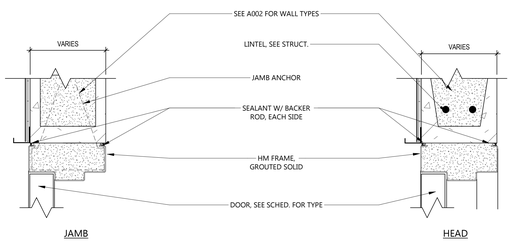

4 A821 HM DR HEAD/JAMB @ CMU
3" = 1'-0"

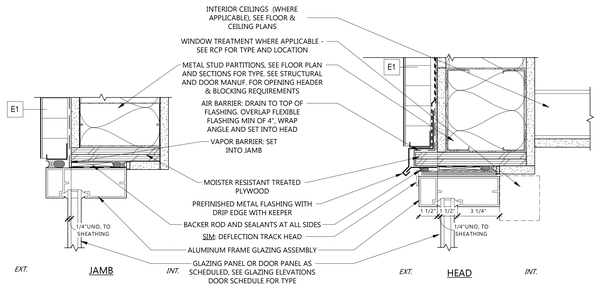

3 A821 DETAIL EXTERIOR OPENING - AL WINDOW/DOOR HEAD. JAMB @ STUD
3" = 1'-0"

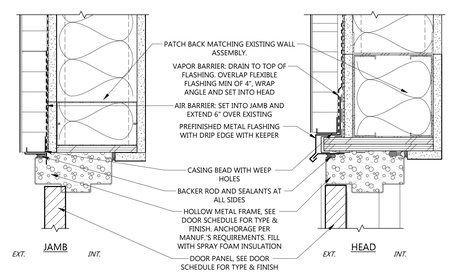

2 A821 DETAIL EXTERIOR OPENING - HM DOOR HEAD/JAMB @ STUD / EIFS
3" = 1'-0"

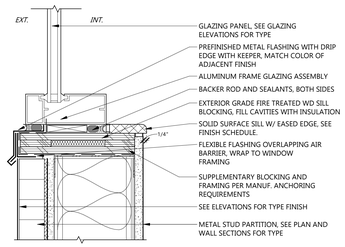

1 A821 DETAIL EXTERIOR OPENING - WINDOW SILL @ E1
3" = 1'-0"

EAPC
Architecture | Engineering
Interior Design | Industrial
TELEPHONE 701.258.3116
116 W. Main Ave., Suite A, Bismarck ND 58501
www.eapc.net

CONSULTANTS

CLIENT
VIBRA HOSPITALS OF THE CENTRAL DAKOTAS

PROJECT DESCRIPTION
BISMARCK REHABILITATION HOSPITAL

CITY BISMARCK
STATE NORTH DAKOTA

ISSUE DATES

MARK	DESCRIPTION	DATE
2	ADDENDUM #1	02/09/2025
1	ISSUED FOR BIDDING	01/29/2026

PROJECT NO: 20251200
DRAWN BY: JB
CHECKED BY: DA

COPYRIGHT:
All plans, specifications, computer files, field data, notes and other documents and instruments prepared by EAPC as instruments of service shall remain the property of EAPC. EAPC shall retain all common law, statutory and other reserved rights, including the copyright there to.

STAMP

I hereby certify that this plan, specification, or report was prepared by me or under my direct supervision and that I am a duly Registered Architect under the laws of the State of North Dakota.
Signature:
Date: 02/09/2026 REG. NO. 1718

Drawing Title
DOOR AND WINDOW DETAILS

A821

Revit Version 2025
Plot Date: 02/12/2026 4:47:25 PM

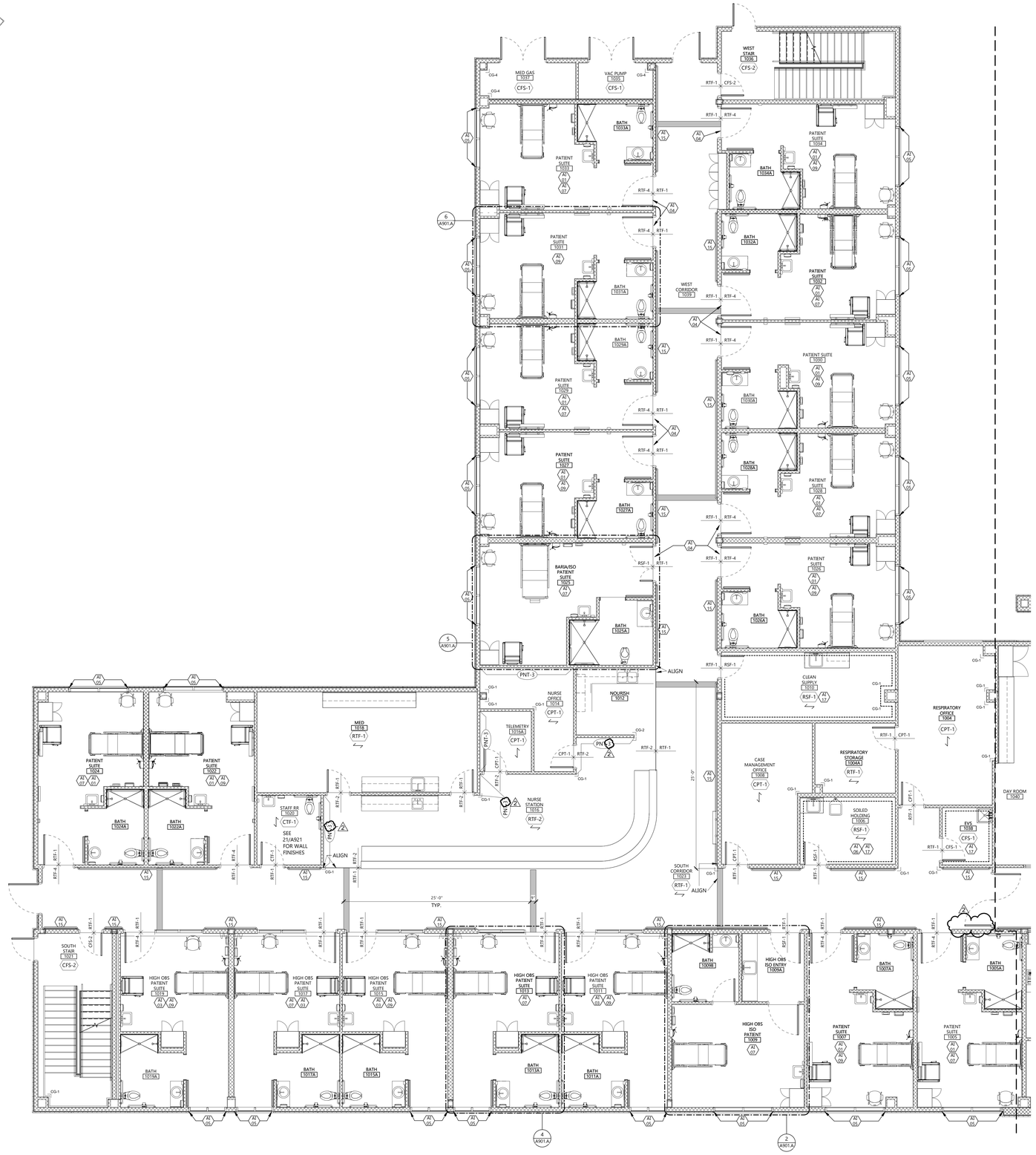

1 A901.A FIRST FLOOR FINISH PLAN AREA A
3/16" = 1'-0"

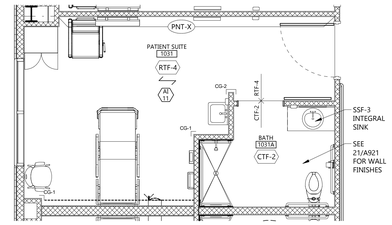

6 A901.A PATIENT SUITE TYP. 1031
1/4" = 1'-0"

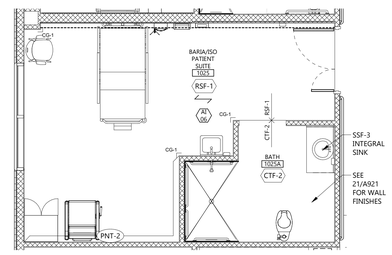

5 A901.A BARIA/ISO PATIENT SUITE 1025
1/4" = 1'-0"

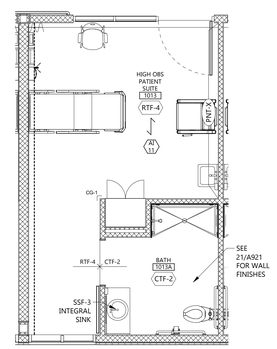

4 A901.A HIGH OBS PATIENT SUITE TYP. 1013
1/4" = 1'-0"

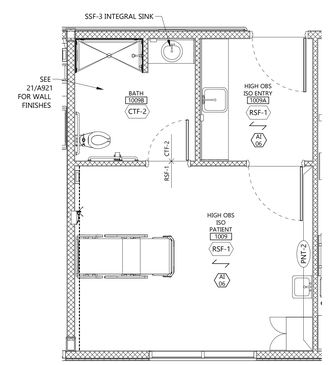

2 A901.A HIGH OBS ISO PATIENT 1009
1/4" = 1'-0"

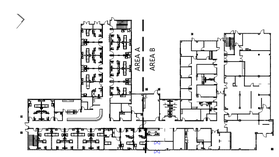

3 A901.A FIRST FLOOR KEY PLAN
1" = 60'-0"

FINISH LEGEND

- PNT-X — WALL FINISH SYMBOL
- CTF-X — FLOOR FINISH SYMBOL
- EXG — EXISTING FLOOR FINISH TO REMAIN
- RIGID WALL PROTECTION
- FIBERGLASS REINFORCED PANEL
- CG-1 — CORNER GUARD
- RTF-3

GENERAL FINISH NOTES

1. REFER TO FINISH PLANS, INTERIOR ELEVATIONS, AND REFLECTED CEILING PLANS FOR ADDITIONAL FINISH LOCATIONS.
2. CONTRACTOR SHALL BE RESPONSIBLE FOR ALLOWING FOR DELIVERY LEAD TIMES FOR ALL FINISHES SPECIFIED WITHIN THE CONSTRUCTION SCHEDULE. ALL DELIVERY TIMES MUST BE CONFIRMED, AND ANY EXCESSIVE LEAD TIME MUST BE BROUGHT TO THE ARCHITECT'S ATTENTION IMMEDIATELY TO ALLOW FOR RE-SPECIFICATION IF NECESSARY.
3. CONTRACTOR SHALL FOLLOW MANUFACTURER'S SPECIFICATIONS FOR INSTALLATION OF ALL MATERIALS.
4. WHERE WALL FINISH CHANGES OCCUR, TERMINATE AT INSIDE CORNERS, UNO.
5. ALL TRANSITIONS OF FLOOR FINISH MATERIALS SHALL BE LOCATED DIRECTLY UNDER CENTER OF DOOR, WHERE OCCURS, UNO. AT SLIDING DOORS, TRANSITIONS SHALL BE LOCATED ON THE INSIDE FACE OF DOOR, UNO.
6. ALL CRACKS, HOLES, IMPERFECTIONS IN EXISTING WALLS, PARTITIONS OR GYP BOARD SHALL BE FILLED WITH PATCHING PLASTER AND SMOOTHED OFF TO MATCH ADJOINING SURFACES.
7. ALL SEALANTS TO MATCH SURFACE IN WHICH THEY OCCUR.
8. JOINTS IN RESILIENT BASE SHALL NOT OCCUR CLOSER THAN 6" FROM CORNER AND SHALL BE BUTTED TIGHTLY TOGETHER.
9. UPON COMPLETION, REMOVE ALL PAINT FROM WHERE IT HAS SPILLED, SPLASHED OR SPLATTERED ON EXPOSED SURFACES.
10. EXAMINE ALL FINISH SURFACES AFTER COMPLETION OF WORK AND PROCEED WITH "TOUCH-UP" AS REQUIRED.
11. ALL VERTICAL SURFACES SHALL RECEIVE WALL BASE (RB-1), UNO.
12. STAINED AND PAINTED SURFACES SHALL BE FINISHED SUCH THAT JOINTS ARE NOT VISIBLE WHEN VIEWED FROM ANY ANGLE AS DETERMINED BY THE ARCHITECT.
13. PROVIDE CORNER GUARDS AT OUTSIDE CORNERS IN PATIENT ROOMS AND AS INDICATED, UNO.
14. CONTRACTOR TO PROVIDE FLOOR SEAMING DIAGRAM TO ARCHITECT FOR APPROVAL PRIOR TO FABRICATION AND INSTALLATION.
15. ALL AREAS OF CONCRETE SLAB RECEIVING A FLOOR COVERING TO UNDERGO MOISTURE TESTING IN ACCORDANCE WITH MANUFACTURERS INSTALLATION INSTRUCTION.
16. ALL WALLS RECEIVING CERAMIC TILE TO HAVE CEMENT BOARD SUBSTRATE.
17. ALL OUTSIDE CORNERS OF TILE INSTALLATIONS TO RECEIVE (TS-2). ALL INTERIOR CORNERS TO RECEIVE SILICONE SEALANT COLOR MATCHED TO GROUT.
18. ALL INTERIOR WINDOW SILLS TO BE (SSF-2), UNO.
19. ALL LINTELS TO BE PAINTED TO MATCH EXTERIOR SURFACE, UNO.

PAINT NOTES

1. ALL WALLS TO RECEIVE (PNT-1), UNO. REFER TO FINISH PLANS FOR MORE INFORMATION.
2. ALL MISCELLANEOUS ITEMS SCHEDULED TO BE PAINTED, INCLUDING MECHANICAL AND ELECTRICAL, PAINT TO MATCH ADJACENT SURFACE.
3. UNDERSIDE OF SOFFITS (WHERE OCCURS) TO RECEIVE A FINISH TO MATCH THE ADJACENT SOFFIT VERTICAL FINISH, UNO.
4. PAINT CEILING ACCESS PANELS WHERE THEY OCCUR TO MATCH ADJACENT CEILING FINISH.
5. HOLLOW METAL DOORS AND HOLLOW METAL FRAMES SHALL BE PAINTED TO MATCH (PTE-1) WHERE NEW WORK IS INDICATED.
6. ALL EXPOSED CEILINGS TO RECEIVE DRYFALL PAINT, UNO. COLOR TO MATCH (PNT-4).
7. ALL RAILING OR GUARD RAILS TO BE PAINTED FIELD COLOR (PTE-1), UNO.

KEYNOTE LEGEND:

< < <	INDICATES KEYNOTE ON PLAN
AI 01	REFER TO PATIENT SUITE 1031 FOR TYPICAL WALL AND FLOOR FINISHES.
AI 03	REFER TO HIGH OBS PATIENT SUITE 1013 FOR TYPICAL WALL AND FLOOR FINISHES.
AI 04	REFER TO 19/A921 FOR ACCENT PAINT AT PATIENT ROOM DOOR.
AI 05	ROLLER SHADES (RS-1).
AI 06	6" HIGH INTEGRAL COVE BASE.
AI 07	PATIENT SUITE TO HAVE ACCENT PAINT (PNT-2) AND WALL PROTECTION (WP-2).
AI 09	PATIENT SUITE TO HAVE ACCENT PAINT (PNT-3) AND WALL PROTECTION (WP-3).
AI 11	REFER TO KEYNOTE IN PATIENT SUITE FOR ACCENT PAINT COLOR AND WALL PROTECTION COLOR.
AI 15	HANDRAIL/CRASHRAIL COMBO.
AI 17	INSTALL WALL PROTECTION UP TO 4'-0" ABOVE RESILIENT BASE OR INTEGRAL COVE BASE (ALL WALLS).

EAPC
Architecture | Engineering
Interior Design | Industrial
TELEPHONE 701.258.3116
116 W. Main Ave., Suite A, Bismarck ND 58501
www.eapc.net

CONSULTANTS

CLIENT
VIBRA HOSPITALS OF THE CENTRAL DAKOTAS

PROJECT DESCRIPTION
BISMARCK REHABILITATION HOSPITAL

CITY BISMARCK
STATE NORTH DAKOTA

ISSUE DATES

MARK	DESCRIPTION	DATE
2	ADDENDUM #1	02/09/2025
1	ISSUED FOR BIDDING	01/29/2026

PROJECT NO: 20251200
DRAWN BY: ML
CHECKED BY: MP

COPYRIGHT:
All plans, specifications, computer files, field data, notes and other documents and instruments prepared by EAPC as instruments of service shall remain the property of EAPC. EAPC shall retain all common law, statutory and other reserved rights, including the copyright thereto.

STAMP

I hereby certify that this plan, specification, or report was prepared by me or under my direct supervision and that I am a duly Registered Architect under the laws of the State of North Dakota.
Signature:
Date: 02/09/2026 REG. NO. 1718

Drawing Title
FIRST FLOOR FINISH PLAN AREA A

A901.A

Revit Version 2025
Plot Date: 2/5/2026 4:19 PM

FINISH LEGEND

PNT-X	WALL FINISH SYMBOL
CTF-X	FLOOR FINISH SYMBOL
EXG	EXISTING FLOOR FINISH TO REMAIN
------	RIGID WALL PROTECTION
— —	FIBERGLASS REINFORCED PANEL
CG-1	CORNER GUARD
	RTF-3

GENERAL FINISH NOTES

1. REFER TO FINISH PLANS, INTERIOR ELEVATIONS, AND REFLECTED CEILING PLANS FOR ADDITIONAL FINISH LOCATIONS.
2. CONTRACTOR SHALL BE RESPONSIBLE FOR ALLOWING FOR DELIVERY LEAD TIMES FOR ALL FINISHES SPECIFIED WITHIN THE CONSTRUCTION SCHEDULE. ALL DELIVERY TIMES MUST BE CONFIRMED, AND ANY EXCESSIVE LEAD TIME MUST BE BROUGHT TO THE ARCHITECT'S ATTENTION IMMEDIATELY TO ALLOW FOR RE-SPECIFICATION IF NECESSARY.
3. CONTRACTOR SHALL FOLLOW MANUFACTURER'S SPECIFICATIONS FOR INSTALLATION OF ALL MATERIALS.
4. WHERE WALL FINISH CHANGES OCCUR, TERMINATE AT INSIDE CORNERS, UNO.
5. ALL TRANSITIONS OF FLOOR FINISH MATERIALS SHALL BE LOCATED DIRECTLY UNDER CENTER OF DOOR, WHERE OCCURS, UNO. AT SLIDING DOORS, TRANSITIONS SHALL BE LOCATED ON THE INSIDE FACE OF DOOR, UNO.
6. ALL CRACKS, HOLES, IMPERFECTIONS IN EXISTING WALLS, PARTITIONS OR GYP BOARD SHALL BE FILLED WITH PATCHING PLASTER AND SMOOTHED OFF TO MATCH ADJOINING SURFACES.
7. ALL SEALANTS TO MATCH SURFACE IN WHICH THEY OCCUR.
8. JOINTS IN RESILIENT BASE SHALL NOT OCCUR CLOSER THAN 6" FROM CORNER AND SHALL BE BUTTED TIGHTLY TOGETHER.
9. UPON COMPLETION, REMOVE ALL PAINT FROM WHERE IT HAS SPILLED, SPLASHED OR SPLATTERED ON EXPOSED SURFACES.
10. EXAMINE ALL FINISH SURFACES AFTER COMPLETION OF WORK AND PROCEED WITH "TOUCH-UP" AS REQUIRED.
11. ALL VERTICAL SURFACES SHALL RECEIVE WALL BASE (RB-1), UNO.
12. STAINED AND PAINTED SURFACES SHALL BE FINISHED SUCH THAT JOINTS ARE NOT VISIBLE WHEN VIEWED FROM ANY ANGLE AS DETERMINED BY THE ARCHITECT.
13. PROVIDE CORNER GUARDS AT OUTSIDE CORNERS IN PATIENT ROOMS AND AS INDICATED, UNO.
14. CONTRACTOR TO PROVIDE FLOOR SEAMING DIAGRAM TO ARCHITECT FOR APPROVAL PRIOR TO FABRICATION AND INSTALLATION.
15. ALL AREAS OF CONCRETE SLAB RECEIVING A FLOOR COVERING TO UNDERGO MOISTURE TESTING IN ACCORDANCE WITH MANUFACTURERS INSTALLATION INSTRUCTION.
16. ALL WALLS RECEIVING CERAMIC TILE TO HAVE CEMENT BOARD SUBSTRATE.
17. ALL OUTSIDE CORNERS OF TILE INSTALLATIONS TO RECEIVE (TS-2). ALL INTERIOR CORNERS TO RECEIVE SILICONE SEALANT COLOR MATCHED TO GROUT.
18. ALL INTERIOR WINDOW SILLS TO BE (SSF-2), UNO.
19. ALL LINTELS TO BE PAINTED TO MATCH EXTERIOR SURFACE, UNO.

PAINT NOTES

1. ALL WALLS TO RECEIVE (PNT-1), UNO. REFER TO FINISH PLANS FOR MORE INFORMATION.
2. ALL MISCELLANEOUS ITEMS SCHEDULED TO BE PAINTED, INCLUDING MECHANICAL AND ELECTRICAL, PAINT TO MATCH ADJACENT SURFACE.
3. UNDERSIDE OF SOFFITS (WHERE OCCURS) TO RECEIVE A FINISH TO MATCH THE ADJACENT SOFFIT VERTICAL FINISH, UNO.
4. PAINT CEILING ACCESS PANELS WHERE THEY OCCUR TO MATCH ADJACENT CEILING FINISH.
5. HOLLOW METAL DOORS AND HOLLOW METAL FRAMES SHALL BE PAINTED TO MATCH (PTE-1) WHERE NEW WORK IS INDICATED.
6. ALL EXPOSED CEILINGS TO RECEIVE DRYFALL PAINT, UNO. COLOR TO MATCH (PNT-4).
7. ALL RAILING OR GUARD RAILS TO BE PAINTED FIELD COLOR (PTE-1), UNO.

KEYNOTE LEGEND:

< < < INDICATES KEYNOTE ON PLAN

A1 05 ROLLER SHADES (RS-1).

A1 06 6" HIGH INTEGRAL COVE BASE.

A1 15 HANDRAIL/CRASHRAIL COMBO.

A1 16 ALTERNATE: PROVIDE PRICING FOR WOOD PANEL WALLCOVERING IN LIEU OF PAINT.

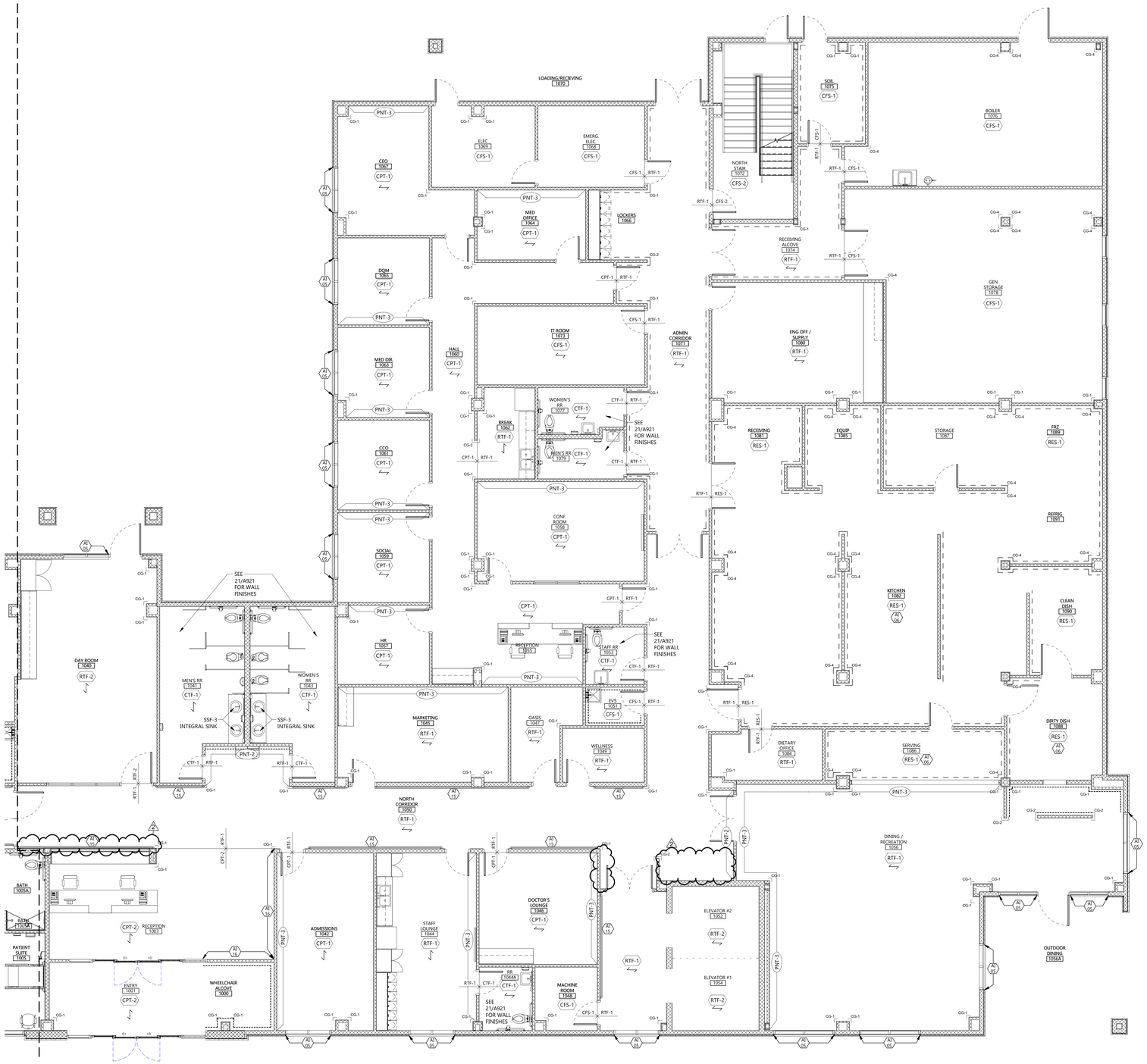

1 A901.B FIRST FLOOR FINISH PLAN AREA B
3/16" = 1'-0"

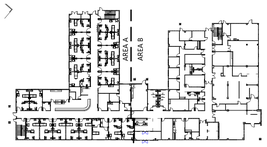

2 A901.B FIRST FLOOR KEY PLAN
1" = 60'-0"

EAPC
Architecture | Engineering
Interior Design | Industrial
TELEPHONE 701.258.3116
116 W. Main Ave., Suite A, Bismarck ND 58501
www.eapc.net

CONSULTANTS

CLIENT
VIBRA HOSPITALS OF THE CENTRAL DAKOTAS

PROJECT DESCRIPTION
BISMARCK REHABILITATION HOSPITAL

CITY BISMARCK
STATE NORTH DAKOTA

ISSUE DATES

MARK	DESCRIPTION	DATE
2	ADDENDUM #1	02/09/2025
1	ISSUED FOR BIDDING	01/29/2026

PROJECT NO: 20251200
DRAWN BY: ML
CHECKED BY: MP

COPYRIGHT:
All plans, specifications, computer files, field data, notes and other documents and instruments prepared by EAPC as instruments of service shall remain the property of EAPC. EAPC shall retain all common law, statutory and other reserved rights, including the copyright there to.

STAMP

I hereby certify that this plan, specification, or report was prepared by me or under my direct supervision and that I am a duly Registered Architect under the laws of the State of North Dakota.

Signature:

Date: 02/09/2026 REG. NO. 1718

Drawing Title
FIRST FLOOR FINISH PLAN AREA B

A901.B

Revit Version: 2025
Plot Date: 02/12/2026 4:47:44 PM

FINISH LEGEND

PNT-X	WALL FINISH SYMBOL
CTF-X	FLOOR FINISH SYMBOL
EXG	EXISTING FLOOR FINISH TO REMAIN
-------	RIGID WALL PROTECTION
— —	FIBERGLASS REINFORCED PANEL
CG-1	CORNER GUARD
	RTF-3

GENERAL FINISH NOTES

1. REFER TO FINISH PLANS, INTERIOR ELEVATIONS, AND REFLECTED CEILING PLANS FOR ADDITIONAL FINISH LOCATIONS.
2. CONTRACTOR SHALL BE RESPONSIBLE FOR ALLOWING FOR DELIVERY LEAD TIMES FOR ALL FINISHES SPECIFIED WITHIN THE CONSTRUCTION SCHEDULE. ALL DELIVERY TIMES MUST BE CONFIRMED, AND ANY EXCESSIVE LEAD TIME MUST BE BROUGHT TO THE ARCHITECT'S ATTENTION IMMEDIATELY TO ALLOW FOR RE-SPECIFICATION IF NECESSARY.
3. CONTRACTOR SHALL FOLLOW MANUFACTURER'S SPECIFICATIONS FOR INSTALLATION OF ALL MATERIALS.
4. WHERE WALL FINISH CHANGES OCCUR, TERMINATE AT INSIDE CORNERS, UNO.
5. ALL TRANSITIONS OF FLOOR FINISH MATERIALS SHALL BE LOCATED DIRECTLY UNDER CENTER OF DOOR. WHERE OCCURS, UNO. AT SLIDING DOORS, TRANSITIONS SHALL BE LOCATED ON THE INSIDE FACE OF DOOR, UNO.
6. ALL CRACKS, HOLES, IMPERFECTIONS IN EXISTING WALLS, PARTITIONS OR GYP BOARD SHALL BE FILLED WITH PATCHING PLASTER AND SMOOTHED OFF TO MATCH ADJOINING SURFACES.
7. ALL SEALANTS TO MATCH SURFACE IN WHICH THEY OCCUR.
8. JOINTS IN RESILIENT BASE SHALL NOT OCCUR CLOSER THAN 6" FROM CORNER AND SHALL BE BUTTED TIGHTLY TOGETHER.
9. UPON COMPLETION, REMOVE ALL PAINT FROM WHERE IT HAS SPILLED, SPLASHED OR SPLATTERED ON EXPOSED SURFACES.
10. EXAMINE ALL FINISH SURFACES AFTER COMPLETION OF WORK AND PROCEED WITH "TOUCH-UP" AS REQUIRED.
11. ALL VERTICAL SURFACES SHALL RECEIVE WALL BASE (RB-1), UNO.
12. STAINED AND PAINTED SURFACES SHALL BE FINISHED SUCH THAT JOINTS ARE NOT VISIBLE WHEN VIEWED FROM ANY ANGLE AS DETERMINED BY THE ARCHITECT.
13. PROVIDE CORNER GUARDS AT OUTSIDE CORNERS IN PATIENT ROOMS AND AS INDICATED, UNO.
14. CONTRACTOR TO PROVIDE FLOOR SEAMING DIAGRAM TO ARCHITECT FOR APPROVAL PRIOR TO FABRICATION AND INSTALLATION.
15. ALL AREAS OF CONCRETE SLAB RECEIVING A FLOOR COVERING TO UNDERGO MOISTURE TESTING IN ACCORDANCE WITH MANUFACTURERS INSTALLATION INSTRUCTION.
16. ALL WALLS RECEIVING CERAMIC TILE TO HAVE CEMENT BOARD SUBSTRATE.
17. ALL OUTSIDE CORNERS OF TILE INSTALLATIONS TO RECEIVE (TS-2). ALL INTERIOR CORNERS TO RECEIVE SILICONE SEALANT COLOR MATCHED TO GROUT.
18. ALL INTERIOR WINDOW SILLS TO BE (SSF-2), UNO.
19. ALL LINTELS TO BE PAINTED TO MATCH EXTERIOR SURFACE, UNO.

PAINT NOTES

1. ALL WALLS TO RECEIVE (PNT-1), UNO. REFER TO FINISH PLANS FOR MORE INFORMATION.
2. ALL MISCELLANEOUS ITEMS SCHEDULED TO BE PAINTED, INCLUDING MECHANICAL AND ELECTRICAL, PAINT TO MATCH ADJACENT SURFACE.
3. UNDERSIDE OF SOFFITS (WHERE OCCURS) TO RECEIVE A FINISH TO MATCH THE ADJACENT SOFFIT VERTICAL FINISH, UNO.
4. PAINT CEILING ACCESS PANELS WHERE THEY OCCUR TO MATCH ADJACENT CEILING FINISH.
5. HOLLOW METAL DOORS AND HOLLOW METAL FRAMES SHALL BE PAINTED TO MATCH (PTE-1) WHERE NEW WORK IS INDICATED.
6. ALL EXPOSED CEILINGS TO RECEIVE DRYFALL PAINT, UNO. COLOR TO MATCH (PNT-4).
7. ALL RAILING OR GUARD RAILS TO BE PAINTED FIELD COLOR (PTE-1), UNO.

KEYNOTE LEGEND:

< < < INDICATES KEYNOTE ON PLAN

AI 01 REFER TO PATIENT SUITE 1031 FOR TYPICAL WALL AND FLOOR FINISHES.

AI 02 REFER TO BARIA/ISO PATIENT SUITE 1025 FOR TYPICAL WALL AND FLOOR FINISHES.

AI 04 REFER TO 19/A921 FOR ACCENT PAINT AT PATIENT ROOM DOOR.

AI 05 ROLLER SHADES (RS-1).

AI 06 6" HIGH INTEGRAL COVE BASE.

AI 07 PATIENT SUITE TO HAVE ACCENT PAINT (PNT-2) AND WALL PROTECTION (WP-2).

AI 09 PATIENT SUITE TO HAVE ACCENT PAINT (PNT-3) AND WALL PROTECTION (WP-3).

AI 15 HANDRAIL/CRASHRAIL COMBO.

AI 17 INSTALL WALL PROTECTION UP TO 4'-0" ABOVE RESILIENT BASE OR INTEGRAL COVE BASE (ALL WALLS).

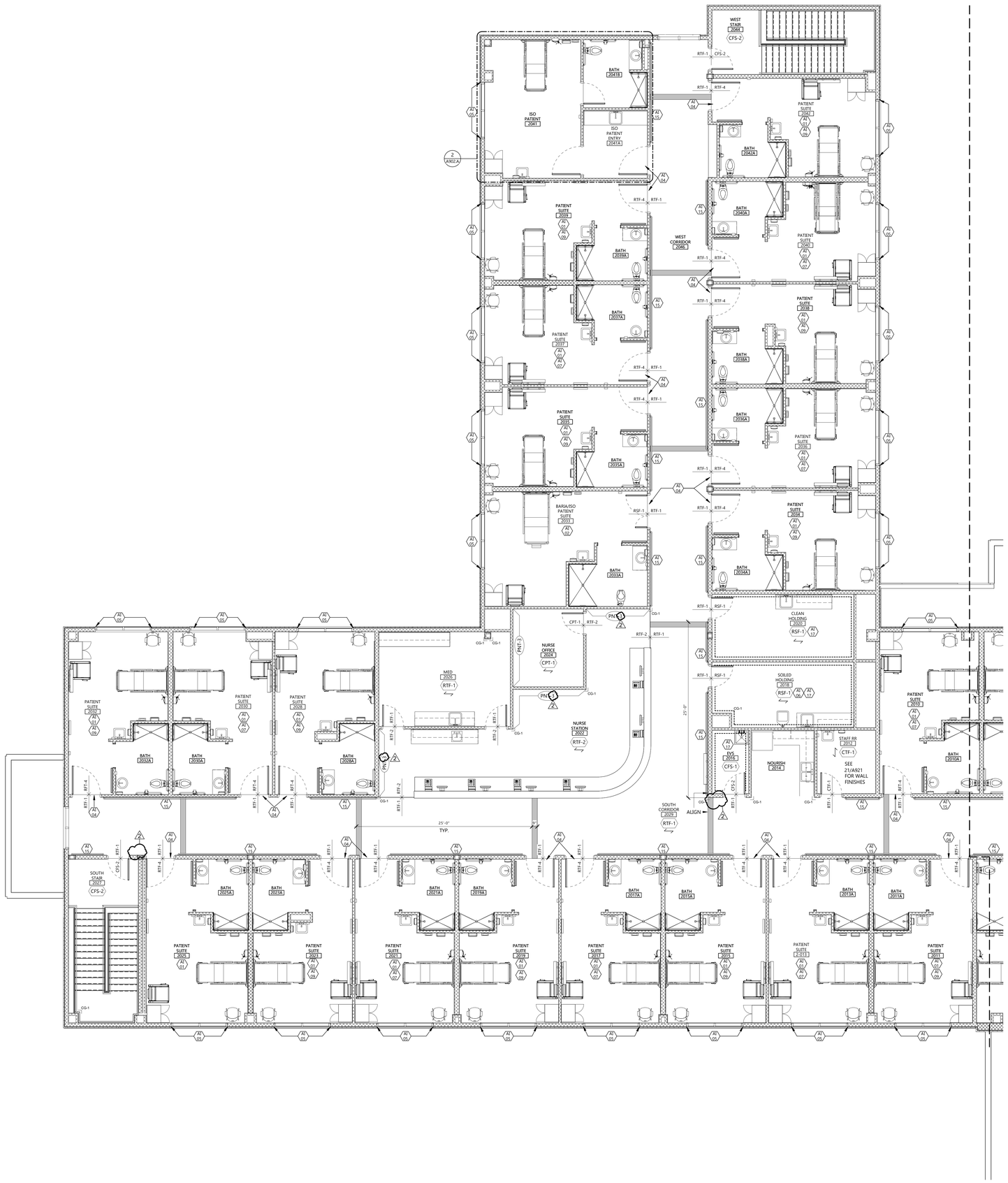

1 A902.A SECOND FLOOR FINISH PLAN AREA A
3/16" = 1'-0"

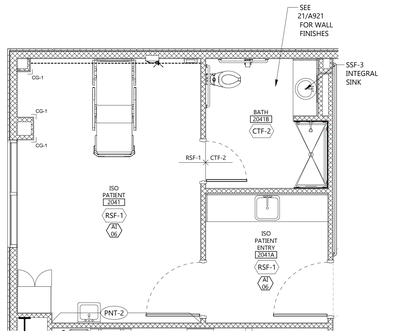

2 A902.A ISO PATIENT 2041
1/4" = 1'-0"

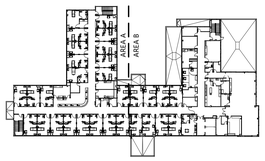

3 A902.A SECOND FLOOR KEY PLAN
1" = 60'-0"

EAPC
Architecture | Engineering
Interior Design | Industrial
TELEPHONE 701.258.3116
116 W. Main Ave., Suite A, Bismarck ND 58501
www.eapc.net

CONSULTANTS

CLIENT
VIBRA HOSPITALS OF THE CENTRAL DAKOTAS

PROJECT DESCRIPTION
BISMARCK REHABILITATION HOSPITAL

CITY BISMARCK
STATE NORTH DAKOTA

ISSUE DATES

MARK	DESCRIPTION	DATE
2	ADDENDUM #1	02/09/2025
1	ISSUED FOR BIDDING	01/29/2026

PROJECT NO: 20251200
DRAWN BY: ML
CHECKED BY: MP

COPYRIGHT:
All plans, specifications, computer files, field data, notes and other documents and instruments prepared by EAPC as instruments of service shall remain the property of EAPC. EAPC shall retain all common law, statutory and other reserved rights, including the copyright there to.

STAMP

I hereby certify that this plan, specification, or report was prepared by me or under my direct supervision and that I am a duly Registered Architect under the laws of the State of North Dakota.

Signature:

Date: 02/09/2026 REG. NO. : 1718

Drawing Title
SECOND FLOOR FINISH PLAN AREA A

A902.A

Revit Version: 2025
Plot Date: 2/9/2026 4:47:19 PM

FINISH LEGEND

PNT-X	WALL FINISH SYMBOL
CTF-X	FLOOR FINISH SYMBOL
EXG	EXISTING FLOOR FINISH TO REMAIN
-------	RIGID WALL PROTECTION
— —	FIBERGLASS REINFORCED PANEL
CG-1	CORNER GUARD
	RTF-3

GENERAL FINISH NOTES

1. REFER TO FINISH PLANS, INTERIOR ELEVATIONS, AND REFLECTED CEILING PLANS FOR ADDITIONAL FINISH LOCATIONS.
2. CONTRACTOR SHALL BE RESPONSIBLE FOR ALLOWING FOR DELIVERY LEAD TIMES FOR ALL FINISHES SPECIFIED WITHIN THE CONSTRUCTION SCHEDULE. ALL DELIVERY TIMES MUST BE CONFIRMED, AND ANY EXCESSIVE LEAD TIME MUST BE BROUGHT TO THE ARCHITECT'S ATTENTION IMMEDIATELY TO ALLOW FOR RE-SPECIFICATION IF NECESSARY.
3. CONTRACTOR SHALL FOLLOW MANUFACTURER'S SPECIFICATIONS FOR INSTALLATION OF ALL MATERIALS.
4. WHERE WALL FINISH CHANGES OCCUR, TERMINATE AT INSIDE CORNERS, UNO.
5. ALL TRANSITIONS OF FLOOR FINISH MATERIALS SHALL BE LOCATED DIRECTLY UNDER CENTER OF DOOR, WHERE OCCURS, UNO. AT SLIDING DOORS, TRANSITIONS SHALL BE LOCATED ON THE INSIDE FACE OF DOOR, UNO.
6. ALL CRACKS, HOLES, IMPERFECTIONS IN EXISTING WALLS, PARTITIONS OR GYP BOARD SHALL BE FILLED WITH PATCHING PLASTER AND SMOOTHED OFF TO MATCH ADJOINING SURFACES.
7. ALL SEALANTS TO MATCH SURFACE IN WHICH THEY OCCUR.
8. JOINTS IN RESILIENT BASE SHALL NOT OCCUR CLOSER THAN 6" FROM CORNER AND SHALL BE BUTTED TIGHTLY TOGETHER.
9. UPON COMPLETION, REMOVE ALL PAINT FROM WHERE IT HAS SPILLED, SPLASHED OR SPLATTERED ON EXPOSED SURFACES.
10. EXAMINE ALL FINISH SURFACES AFTER COMPLETION OF WORK AND PROCEED WITH "TOUCH-UP" AS REQUIRED.
11. ALL VERTICAL SURFACES SHALL RECEIVE WALL BASE (RB-1), UNO.
12. STAINED AND PAINTED SURFACES SHALL BE FINISHED SUCH THAT JOINTS ARE NOT VISIBLE WHEN VIEWED FROM ANY ANGLE AS DETERMINED BY THE ARCHITECT.
13. PROVIDE CORNER GUARDS AT OUTSIDE CORNERS IN PATIENT ROOMS AND AS INDICATED, UNO.
14. CONTRACTOR TO PROVIDE FLOOR SEAMING DIAGRAM TO ARCHITECT FOR APPROVAL PRIOR TO FABRICATION AND INSTALLATION.
15. ALL AREAS OF CONCRETE SLAB RECEIVING A FLOOR COVERING TO UNDERGO MOISTURE TESTING IN ACCORDANCE WITH MANUFACTURERS INSTALLATION INSTRUCTION.
16. ALL WALLS RECEIVING CERAMIC TILE TO HAVE CEMENT BOARD SUBSTRATE.
17. ALL OUTSIDE CORNERS OF TILE INSTALLATIONS TO RECEIVE (TS-2). ALL INTERIOR CORNERS TO RECEIVE SILICONE SEALANT COLOR MATCHED TO GROUT.
18. ALL INTERIOR WINDOW SILLS TO BE (SSF-2), UNO.
19. ALL LINTELS TO BE PAINTED TO MATCH EXTERIOR SURFACE, UNO.

PAINT NOTES

1. ALL WALLS TO RECEIVE (PNT-1), UNO. REFER TO FINISH PLANS FOR MORE INFORMATION.
2. ALL MISCELLANEOUS ITEMS SCHEDULED TO BE PAINTED, INCLUDING MECHANICAL AND ELECTRICAL, PAINT TO MATCH ADJACENT SURFACE.
3. UNDERSIDE OF SOFFITS (WHERE OCCURS) TO RECEIVE A FINISH TO MATCH THE ADJACENT SOFFIT VERTICAL FINISH, UNO.
4. PAINT CEILING ACCESS PANELS WHERE THEY OCCUR TO MATCH ADJACENT CEILING FINISH.
5. HOLLOW METAL DOORS AND HOLLOW METAL FRAMES SHALL BE PAINTED TO MATCH (PTE-1) WHERE NEW WORK IS INDICATED.
6. ALL EXPOSED CEILINGS TO RECEIVE DRYFALL PAINT, UNO. COLOR TO MATCH (PNT-4).
7. ALL RAILING OR GUARD RAILS TO BE PAINTED FIELD COLOR (PTE-1), UNO.

KEYNOTE LEGEND:

< < < INDICATES KEYNOTE ON PLAN

A1 01 REFER TO PATIENT SUITE 1031 FOR TYPICAL WALL AND FLOOR FINISHES.

A1 04 REFER TO 19/A921 FOR ACCENT PAINT AT PATIENT ROOM DOOR.

A1 05 ROLLER SHADES (RS-1).

A1 06 6" HIGH INTEGRAL COVE BASE.

A1 07 PATIENT SUITE TO HAVE ACCENT PAINT (PNT-2) AND WALL PROTECTION (WP-2).

A1 09 PATIENT SUITE TO HAVE ACCENT PAINT (PNT-3) AND WALL PROTECTION (WP-3).

A1 15 HANDRAIL/CRASHRAIL COMBO.

A1 17 INSTALL WALL PROTECTION UP TO 4'-0" ABOVE RESILIENT BASE OR INTEGRAL COVE BASE (ALL WALLS).

A1 18 ALL WALLS AND CEILINGS TO BE PAINTED WITH HPC-1 HIGH PERFORMANCY COATING.

A1 20 FRP-1 TO BE INSTALLED FLOOR TO ROOF DECKING BEHIND LADDER AS SHOWN.

1 A902.B SECOND FLOOR FINISH PLAN AREA B
3/16" = 1'-0"

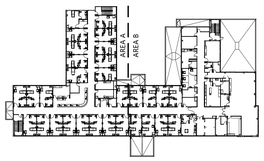

2 A902.B SECOND FLOOR KEY PLAN
1" = 60'-0"

EAPC
Architecture | Engineering
Interior Design | Industrial
TELEPHONE 701.258.3116
116 W. Main Ave., Suite A, Bismarck ND 58501
www.eapc.net

CONSULTANTS

CLIENT
VIBRA HOSPITALS OF THE CENTRAL DAKOTAS

PROJECT DESCRIPTION
BISMARCK REHABILITATION HOSPITAL

CITY BISMARCK
STATE NORTH DAKOTA

ISSUE DATES

MARK	DESCRIPTION	DATE
2	ADDENDUM #1	02/09/2025
1	ISSUED FOR BIDDING	01/29/2026

PROJECT NO: 20251200
DRAWN BY: ML
CHECKED BY: MP

COPYRIGHT:
All plans, specifications, computer files, field data, notes and other documents and instruments prepared by EAPC as instruments of service shall remain the property of EAPC. EAPC shall retain all common law, statutory and other reserved rights, including the copyright there to.

STAMP

I hereby certify that this plan, specification, or report was prepared by me or under my direct supervision and that I am a duly Registered Architect under the laws of the State of North Dakota.

Signature:

Date: 02/09/2026 REG. NO. : 1718

Drawing Title
SECOND FLOOR FINISH PLAN AREA B

A902.B

Revit Version:2025
Plot Date:01/29/2026 4:48:01 PM

FINISH MATERIALS LIST

SPEC NO.	CODE	MATERIAL	MANUFACTURER	STYLE	COLOR	SIZE	REMARKS
06 61 00 CAST POLYMER FABRICATIONS	SSF-4	SOLID SURFACE SHOWER WALLS	INPRO	PRISM SOLID SURFACE SHOWER WALLS	WOOL P9709	1/4" THICKNESS 60" X 96" PANELS	EASED EDGES
08 14 16 WOOD DOORS	WD-1	WOOD FINISH	FORTE	RED OAK SPECIES	ENGLISH SADDLE		
09 30 00 CERAMIC TILING	CTF-1	PORCELAIN FLOOR TILE	CROSSVILLE	PORTUGAL	PTGO4 TINTA NEGRA	24" X 24"	STACKED INSTALL
	CTF-2	PORCELAIN MOSAIC TILE FLOOR	CROSSVILLE	PORTUGAL	PTGO4 TINTA NEGRA	2" X 2"	FLOORING IN PATIENT RESTROOMS
	CTB-1	PORCELAIN COVED TILE BASE	CROSSVILLE	PORTUGAL	PTGO4 TINTA NEGRA	6" X 24"	COVED BASE AT SHOWERS ONLY
	CTW-1	PORCELAIN STONE WALL TILE	VIRGINIA TILE - CROSSVILLE	ALASKA	GLACIER	12" X 24"	VERTICAL 1/2 RUNNING BOND INSTALL
	GR-1	GROUT (FLOOR TILE)	BOSTIK	TRUCOLOR	TAUPE H151		
	GR-2	GROUT (WALL TILE)	BOSTIK	TRUCOLOR	MISTY GRAY H144		
	TS-1	METAL TRANSITION STRIP	SCHLUTER SYSTEMS	RENO-U	SATIN NICKEL ANODIZED	TBD BY INSTALLER	RTF TO CTF
	TS-2	METAL TRANSITION STRIP	SCHLUTER SYSTEMS	JOLLY	SATIN NICKEL ANODIZED	TBD BY INSTALLER	CTW TO CTW & SSF-4 TO CTW
	TS-3	METAL TRANSITION STRIP	SCHLUTER SYSTEMS	DILEX-AHK	SATIN NICKEL ANODIZED	TBD BY INSTALLER	CTF TO CTW
	TS-4	METAL TRANSITION STRIP	SCHLUTER SYSTEMS	SCHIENE	SATIN NICKEL ANODIZED	TBD BY INSTALLER	CTF TO RSF
09 51 00 ACOUSTICAL CEILING TILES	ACT-1	ACOUSTICAL CEILING TILE	ARMSTRONG	ULTIMA TEGULAR 1902	WHITE	2' X 2' X 7/8"	GRID: PRELUDE, WHITE
	ACT-2	ACOUSTICAL CEILING TILE	ARMSTRONG	ULTIMA HEALTH ZONE AIRASSURE 1352	WHITE	2' X 2' X 3/4"	GASKETED
09 65 13 RESILIENT BASE	RB-1	RESILIENT WALL BASE	TARKETT JOHNSONITE	BASEWORKS THERMOSET RUBBER (TS)	VN2 STONE COTTAGE	4" H	
	TS-5	METAL TRANSITION STRIP	POWERHOLD	LVT 118 5 MM TO 2 MM NO LIP RAMP	ANODIZED ALUMINUM	TBD BY INSTALLER	RTF TO RSF
	TS-6	VINYL TRANSITION STRIP	TARKETT JOHNSONITE	JOHNSONITE REDUCER	VN2 STONE COTTAGE	TBD BY INSTALLER	RTF TO RES
09 65 16 RESILIENT SHEET FLOORING	RSF-1	RESILIENT SHEET FLOORING	PATCRAFT	WITHIN COLLECTION: I623V PURSUE SHEET	00780 MELLOW	2 MM THICKNESS	HEAT-WELD SEAMS
09 65 19 RESILIENT TILE FLOORING	RTF-1	RESILEINT TILE FLOORING	INTERFACE	SILK COMPLEX COLLECTION: SHANTUNG	A02704 ORCHID	4.5 MM THICKNESS 9.845" X 39.27"	
	RTF-2	RESILIENT TILE FLOORING	INTERFACE	SILK COMPLEX COLLECTION: SHANTUNG	A02707 SWEET PEA	4.5 MM THICKNESS 9.845" X 39.27"	
	RTF-3	RESILIENT TILE FLOORING	INTERFACE	SILK COMPLEX COLLECTION: SHANTUNG	A02711 BLUEBELL	4.5 MM THICKNESS 9.845" X 39.27"	
	RTF-4	RESILIENT TILE FLOORING	INTERFACE	NORTHERN GRAIN	A02611 OAK SATIN	4.5 MM THICKNESS 9.845" X 39.27"	
09 67 00 RESINOUS EPOXY FLOORING	RES-1	RESINOUS EPOXY FLOORING	SHERWIN WILLIAMS	POLY-CRETE SLB	DARK GREY		USED IN KITCHEN
09 68 13 CARPET TILE	CPT-1	CARPET TILE	INTERFACE	LOST PALMS COLLECTION: DESERT VEINS	108149 COTTONWOOD	19.69" X 39.38"	INSTALL: ASHLAR
	CPT-2	WALK-OFF CARPET TILE	PATCRAFT	NAVIGATE IT I0859	00500 HAILSTORM	18" X 36"	INSTALL: ASHLAR
09 78 00 INTERIOR WALL PANELING	IWP-1	DECORATIVE WALL PANELS	SOELBERG	TEXTURE WALLS	TBD	4' X 8' PANELS	
09 91 23 INTERIOR PAINTING	PNT-1	INTERIOR PAINT	SHERWIN WILLIAMS	PROMAR 200 ACRYLIC EG-SHEL LOW VOC	SW 7637 OYSTER WHITE		FIELD PAINT
	PTE-1	INTERIOR EPOXY PAINT	SHERWIN WILLIAMS	PROMAR INDUSTRIAL PRE-CATALYZED WATER BASED EPOXY K46 SERIES - SEMI GLOSS	SW 7637 OYSTER WHITE		DOOR FRAMES, PATIENT RESTROOM WALLS
	PNT-2	INTERIOR PAINT	SHERWIN WILLIAMS	PROMAR 200 ACRYLIC EG-SHEL LOW VOC	SW 6227 MEDITATIVE		ACCENT PAINT
	PNT-3	INTERIOR PAINT	SHERWIN WILLIAMS	PROMAR 200 ACRYLIC EG-SHEL LOW VOC	SW 9132 ACADIA HAZE		ACCENT PAINT
	PNT-4	INTERIOR PAINT	SHERWIN WILLIAMS	PROMAR 200 ACRYLIC FLAT LOW VOC	SW 7757 HIGH REFLECTIVE WHITE		CEILING PAINT
	CFS-1	WATER-BASED EPOXY FLOORING	SHERWIN WILLIAMS	ARMORSEAL 8100	HAZE GRAY		
	CFS-2	WATER-BASED EPOXY FLOORING	SHERWIN WILLIAMS	ARMORSEAL 8100	CLEAR		
09 96 00 HIGH-PREFORMANCE COATINGS	HPC-1	HIGH PREFORMANCE COATING	SHERWIN WILLIAMS	RESUWALL AQUA HIGH BUILD	WHITE		USED ON WALLS AND CEILING IN LAMINAR FLOW & ANTEROOM
10 21 13.17 PHENOLIC TOILET COMPARTMENTS	PTC-1	TOILET PARTITIONS	BRADLEY CORP	PHENOLIC PRIVACY PARTITIONS	SLATE GREY D91		
10 21 23 CUBICLE CURTAIN AND TRACK	CC-1	CUBICLE CURTAIN	INPRO	SIMPLICITY	BLUEMOON	72" WIDTH	
10 26 00 WALL & DOOR PROTECTION	CG-1	CORNER GUARD	CS/ ACROVYN	SM-20AN	PEARL #934	3" WING 8' HIGH	
	CG-2	END CAP CORNER GUARD	CS/ ACROVYN	SSM-25AN	PEARL #934	2" WING 8' HIGH	
	CG-3	CORNER GUARD	CS/ ACROVYN	SSM-20AN	PEARL #934	2" WING 8' HIGH	
	CG-4	CORNER GUARD	CS/ ACROVYN	CO-8	STAINLESS STEEL	2" WING 8' HIGH	CORNER GUARDS IN KITCHEN
	HDR-1	HAND RAIL	CS/ ACROVYN	HRB-20	PUMICE #858		HANDRAILS IN CORRIDOR
	CHR-1	CRASH RAIL	CS/ ACROVYN	SCR-80	PUMICE #858	8" HIGH	CRASHRAIL IN CORRIDOR, USE WITH HANDRAILS
	FRP-1	FIBERGLASS REINFORCED PANEL	MARLITE	STANDARD FRP	P100 WHITE	4' X 8' PANELS	PVC TRIM FINISHES
	WP-1	RIGID WALL PROTECTION	CS/ ACROVYN	HIGH IMPACT WALL COVERING	PEARL #934	0.040" THICKNESS	COLOR MATCHED SEALANT
	WP-2	RIGID WALL PROTECTION	INPRO	PALLADIUM WALL PROTECTION	SERENITY 0166	0.040" THICKNESS	COLOR MATCHED SEALANT
	WP-3	RIGID WALL PROTECTION	CS/ ACROVYN	HIGH IMPACT WALL COVERING	SAGE GREEN #660	0.040" THICKNESS	COLOR MATCHED SEALANT
10 28 00 TOILET, BATH, AND LAUNDRY ACCESSORIES	SC-1	SHOWER CURTAIN	INPRO	SUPER BIO STAT	STERLING	72.5" WIDTH	
10 51 29 PHENOLIC LOCKERS	PL-1	PHENOLIC LOCKERS	BRADLEY CORP	PHENOLIC Z-LOCKER	SLATE GREY D91	15" W X 18" D X 72" H	
12 24 00 ROLLER SHADES	RS-1	ROLLER SHADE	DRAPER	CLUTCH-OPERATED FLEXSHADE DUAL ROLL	E SCREEN 1% PEARL/LINEN & APAGON STYLE III DARK GREY/WHITE		
12 32 00 MANUFACTURED WOOD CASEWORK	PLAM-1	PLASTIC LAMINATE	WILSONART		WALNUT PB COGNAC 8279K-05		
	SSF-1	SOLID SURFACE	CORIAN		RAIN CLOUD		COUNTERTOPS
	SSF-2	SOLID SURFACE	CORIAN		GLACIER WHITE		WINDOW SILLS
	SSF-3	SOLID SURFACE	CORIAN	INTEGRAL SINK BOWL	GLACIER WHITE	810P	ONLY IN PATIENT RESTROOMS & ROOMS 1041,1043

1

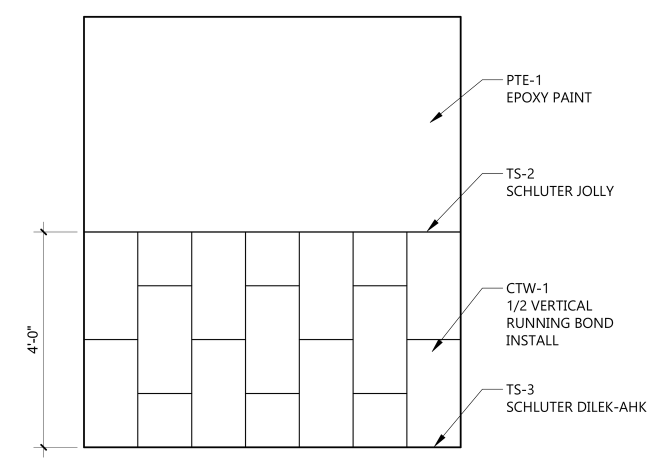

21 A921 RESTROOM FINISH INSTALL
1/2" = 1'-0"

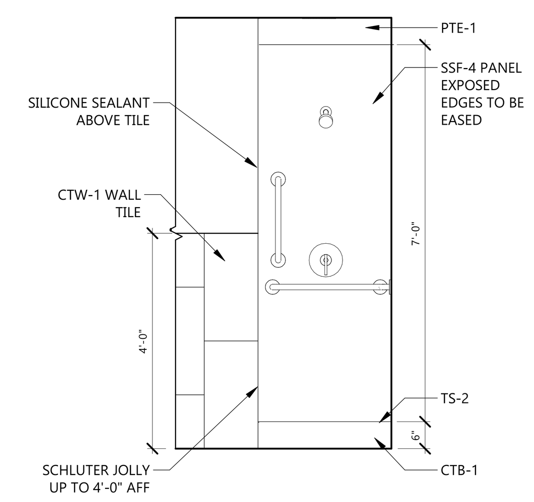

20 A921 ENLARGED SHOWER FIXTURE WALL ELEVATION - TYP.
1/2" = 1'-0"

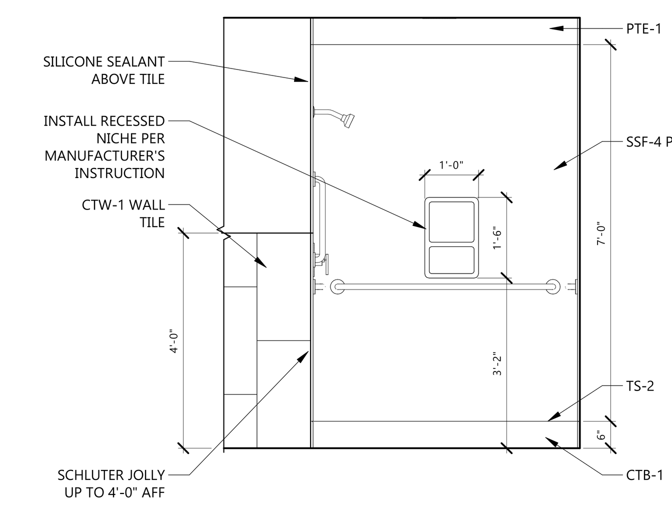

19 A921 ENLARGED SHOWER SIDE WALL ELEVATION - TYP.
1/2" = 1'-0"

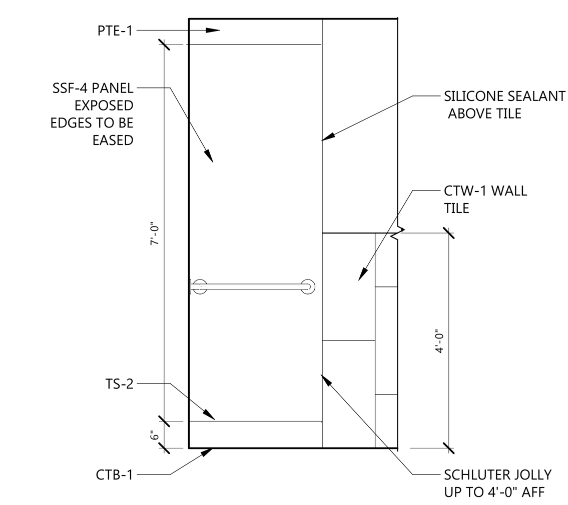

18 A921 ENLARGED SHOWER BACK WALL ELEVATION - TYP.
1/2" = 1'-0"

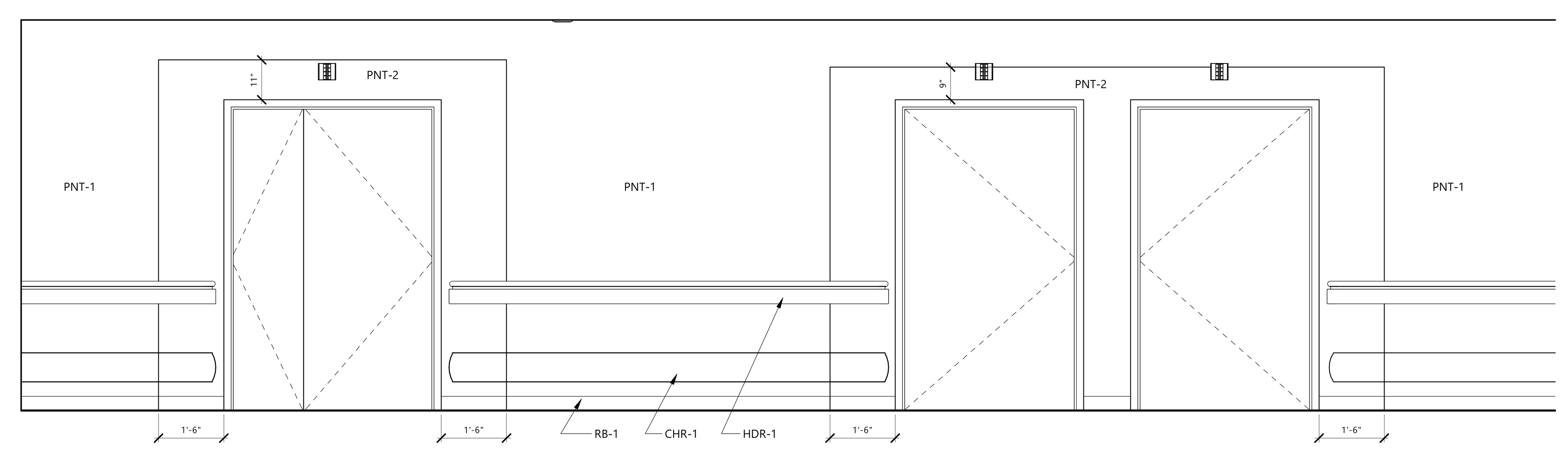

17 A921 ACCENT PAINT AT PATIENT ROOM DOORS - TYP
1/2" = 1'-0"

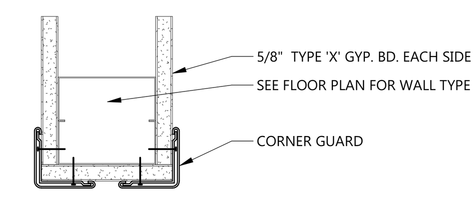

16 A921 CORNER GUARD DETAIL
3" = 1'-0"

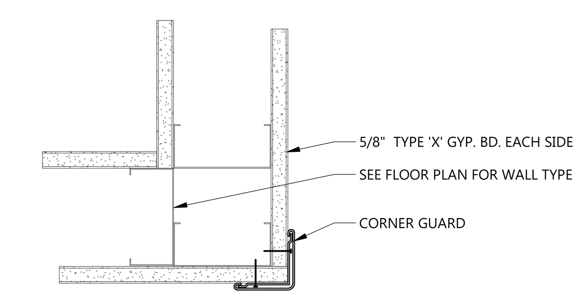

15 A921 CORNER GUARD DETAIL
3" = 1'-0"

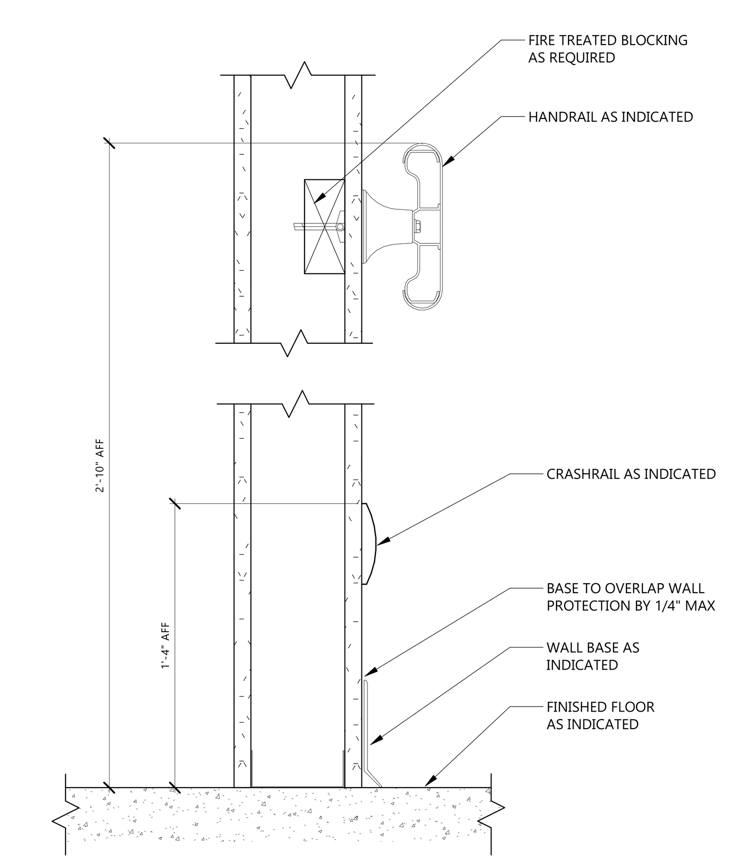

14 A921 FINISH DETAIL - HANDRAIL/ WALL PROTECTION
NOT TO SCALE

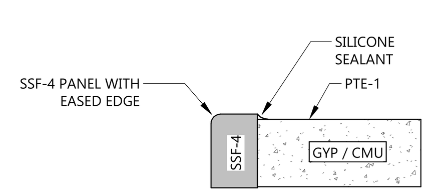

13 A921 FINISH DETAIL - SSF-4 PANEL TO PTE-1
1" = 1'-0"

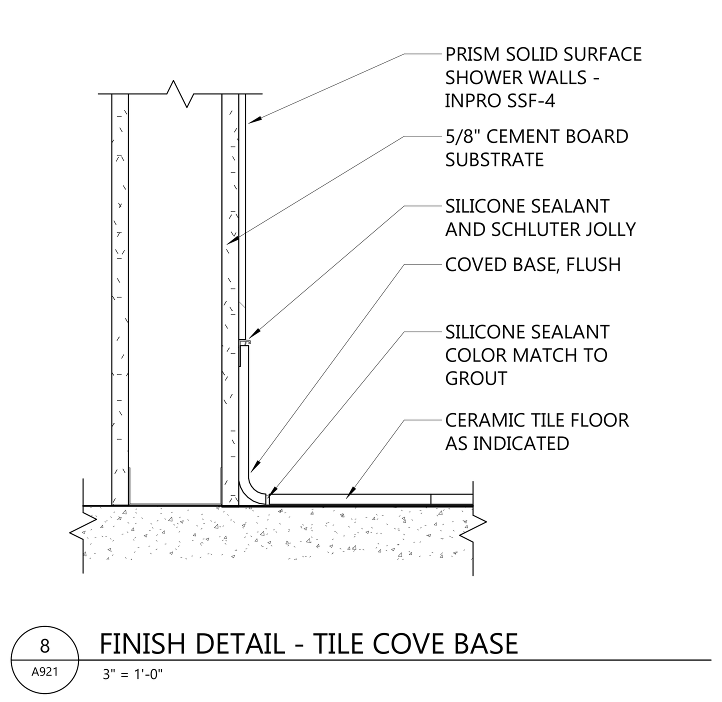

8 A921 FINISH DETAIL - TILE COVE BASE
3" = 1'-0"

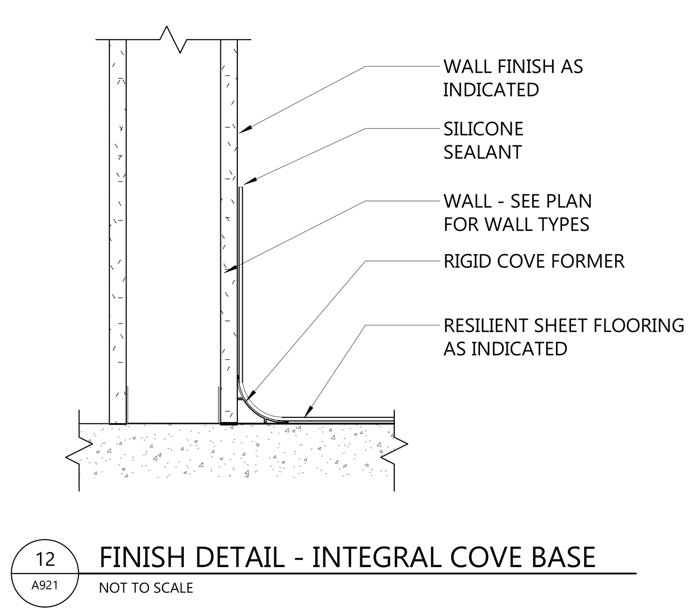

12 A921 FINISH DETAIL - INTEGRAL COVE BASE
NOT TO SCALE

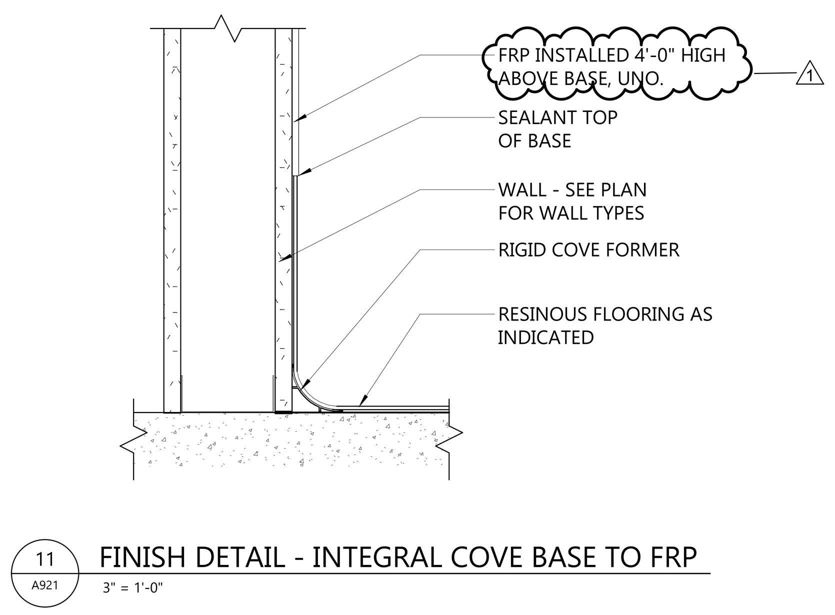

11 A921 FINISH DETAIL - INTEGRAL COVE BASE TO FRP
3" = 1'-0"

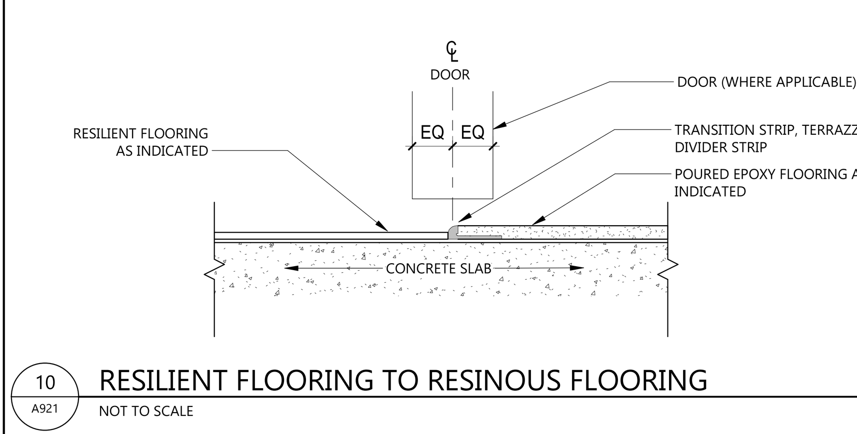

10 A921 RESILIENT FLOORING TO RESINOUS FLOORING
NOT TO SCALE

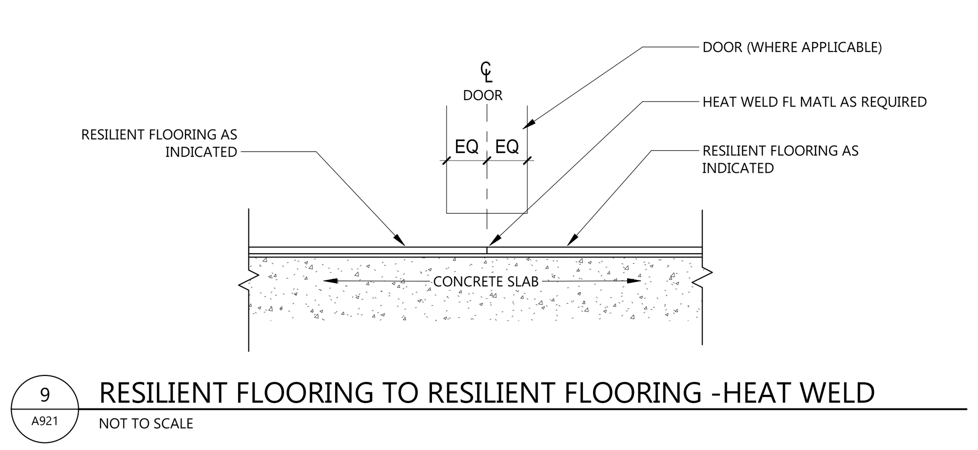

9 A921 RESILIENT FLOORING TO RESILIENT FLOORING -HEAT WELD
NOT TO SCALE

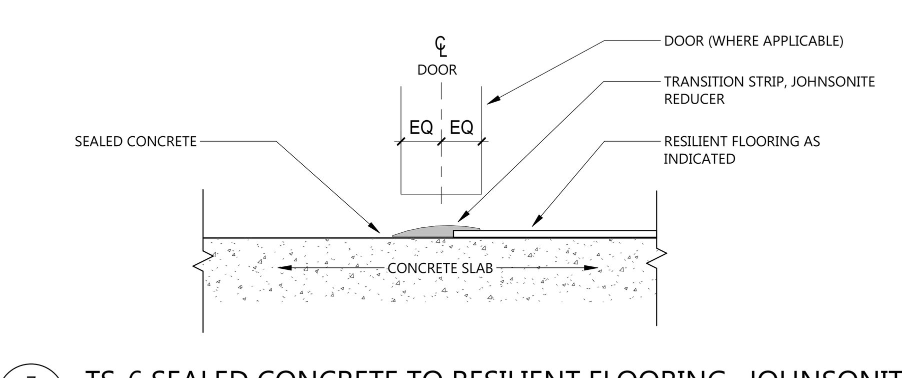

7 A921 TS-6 SEALED CONCRETE TO RESILIENT FLOORING -JOHNSONITE
6" = 1'-0"

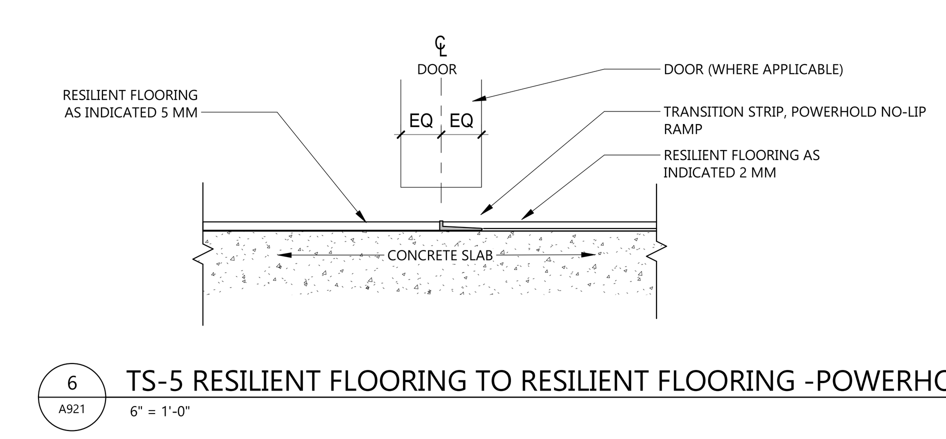

6 A921 TS-5 RESILIENT FLOORING TO RESILIENT FLOORING -POWERHOLD
6" = 1'-0"

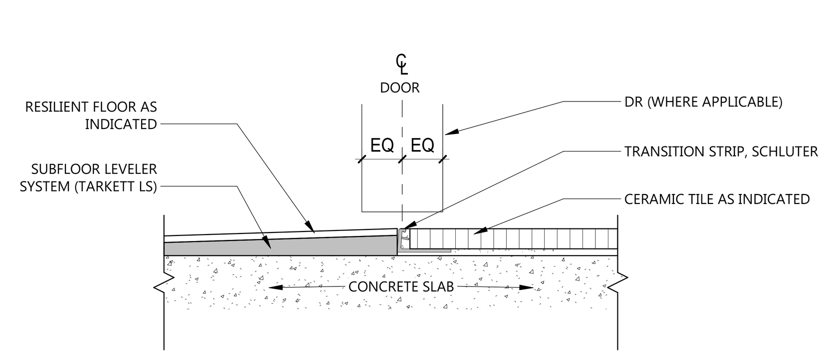

5 A921 TS-4 RESILIENT FLOORING TO CERAMIC TILE - SCHLUTER SCHIENE
6" = 1'-0"

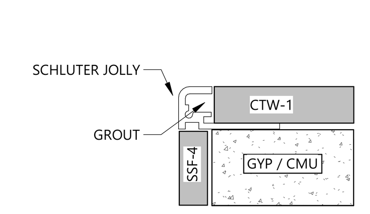

4 A921 TS-2 OUTSIDE SHOWER CORNER DETAIL BELOW 4'-0" AFF
1" = 1'-0"

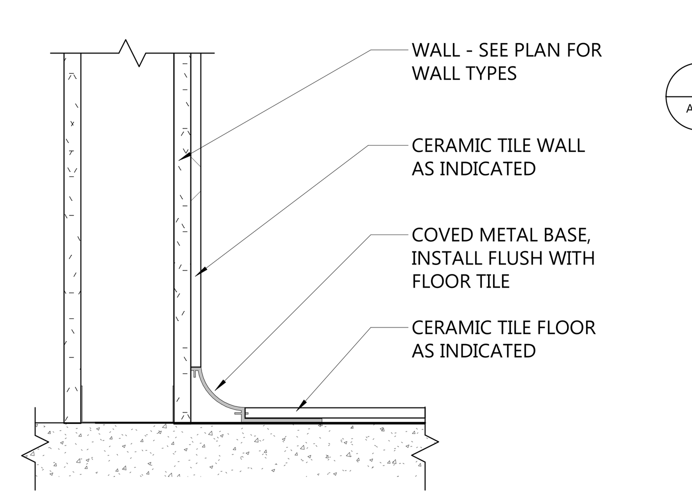

3 A921 TS-3 FINISH DETAIL - SCHLUTER DILEK-AHK
NOT TO SCALE

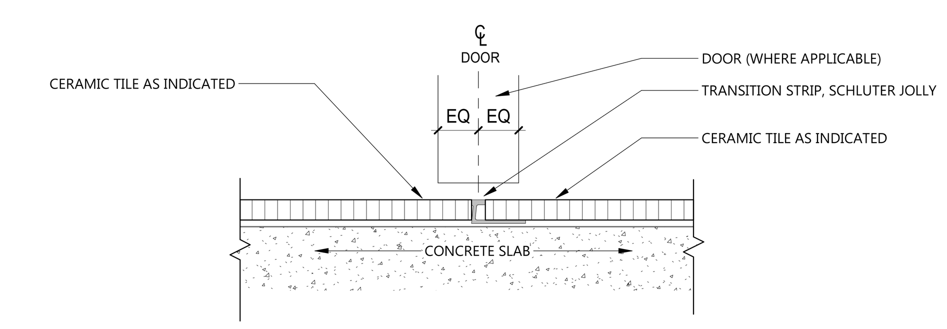

2 A921 TS-2 CERAMIC TILE TO CERAMIC TILE - SCHLUTER JOLLY
NOT TO SCALE

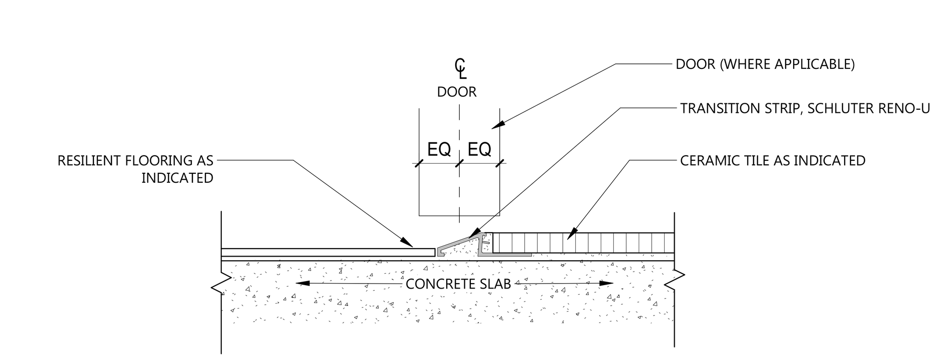

1 A921 TS-1 RESILIENT FLOORING TO CERAMIC TILE - SCHLUTER RENO-U
NOT TO SCALE

EAPC
Architecture | Engineering
Interior Design | Industrial
TELEPHONE 701.258.3116
116 W. Main Ave., Suite A, Bismarck ND 58501
www.eapc.net

CONSULTANTS

CLIENT
VIBRA HOSPITALS OF THE CENTRAL DAKOTAS

PROJECT DESCRIPTION
BISMARCK REHABILITATION HOSPITAL

CITY BISMARCK
STATE NORTH DAKOTA

ISSUE DATES

MARK	DESCRIPTION	DATE
2	ADDENDUM #1	02/09/2025
1	ISSUED FOR BIDDING	01/29/2026

PROJECT NO: 20251200
DRAWN BY: ML
CHECKED BY: MP

COPYRIGHT:
All plans, specifications, computer files, field data, notes and other documents and instruments prepared by EAPC as instruments of service shall remain the property of EAPC. EAPC shall retain all common law, statutory and other reserved rights, including the copyright there to.

STAMP

I hereby certify that this plan, specification, or report was prepared by me or under my direct supervision and that I am a duly Registered Architect under the laws of the State of North Dakota.
Signature:
Date: 02/09/2026 REG. NO. : 1718

Drawing Title
INTERIOR FINISH DETAILS & MATERIAL IDENTIFICATION CODES

A921

Revit Version: 2025
Plot Date: 2/6/2026 6:48:11 PM

PLUMBING FIXTURE CONNECTION SCHEDULE

ITEM NO.	CONNECTIONS - INCHES WASTE	VENT	CW	HW
EEW	2"	1-1/2"	3/4"	3/4"
ELEC. WATER COOLER	2"	1-1/2"	1/2"	1/2"
FLOOR DRAIN	SEE PLAN	SEE PLAN	-	-
FLOOR SINK	SEE PLAN	SEE PLAN	-	-
WALL HYDRANT / HOSE BIBB	-	-	3/4"	-
LAVATORY	2"	1-1/2"	1/2"	1/2"
LAUNDRY TUB	2"	1-1/2"	3/4"	3/4"
MOP BASIN	3"	1-1/2"	3/4"	3/4"
SINK	2"	1-1/2"	1/2"	1/2"
SHOWER	2"	1-1/2"	1/2"	1/2"
URINAL	2"	1-1/2"	3/4"	-
WATER CLOSET (FV)	4"	2"	1"	-
WMT	2"	1-1/2"	3/4"	3/4"

NOTE:
1. ALL UNDERGROUND WASTE & VENT PIPING SHALL BE 2" MINIMUM.
2. VENT CONNECTIONS INDICATED ARE MINIMUM REQUIRED BY CODE IF HORIZONTAL VENT PIPE RUNS OVER 1/3 OF CODE ALLOWED DISTANCE PIPE SHALL BE INCREASED TO NEXT SIZE AS REQUIRED.

GENERAL NOTES

1. PROVIDE WALL CLEANOUTS AT THE BASES OF ALL RAINLEADERS & SANITARY SEWER STACKS AT 100'-0" MAXIMUM.
2. PROVIDE EXPANSION LOOPS ON DOMESTIC HOT & RECIRCULATING HOT WATER AT 100'-0" MAXIMUM.
3. ALL SHUTOFF VALVES SHALL BE INSTALLED IN ACCESSIBLE CEILINGS (LAY-IN TILE CEILINGS) TYP.
4. COORDINATE HOLDOUTS IN CONCRETE AS REQUIRED.
5. PROVIDE ACCESS PANELS TO ALL WATER HAMMER ARRESTORS ABOVE HARD CEILINGS

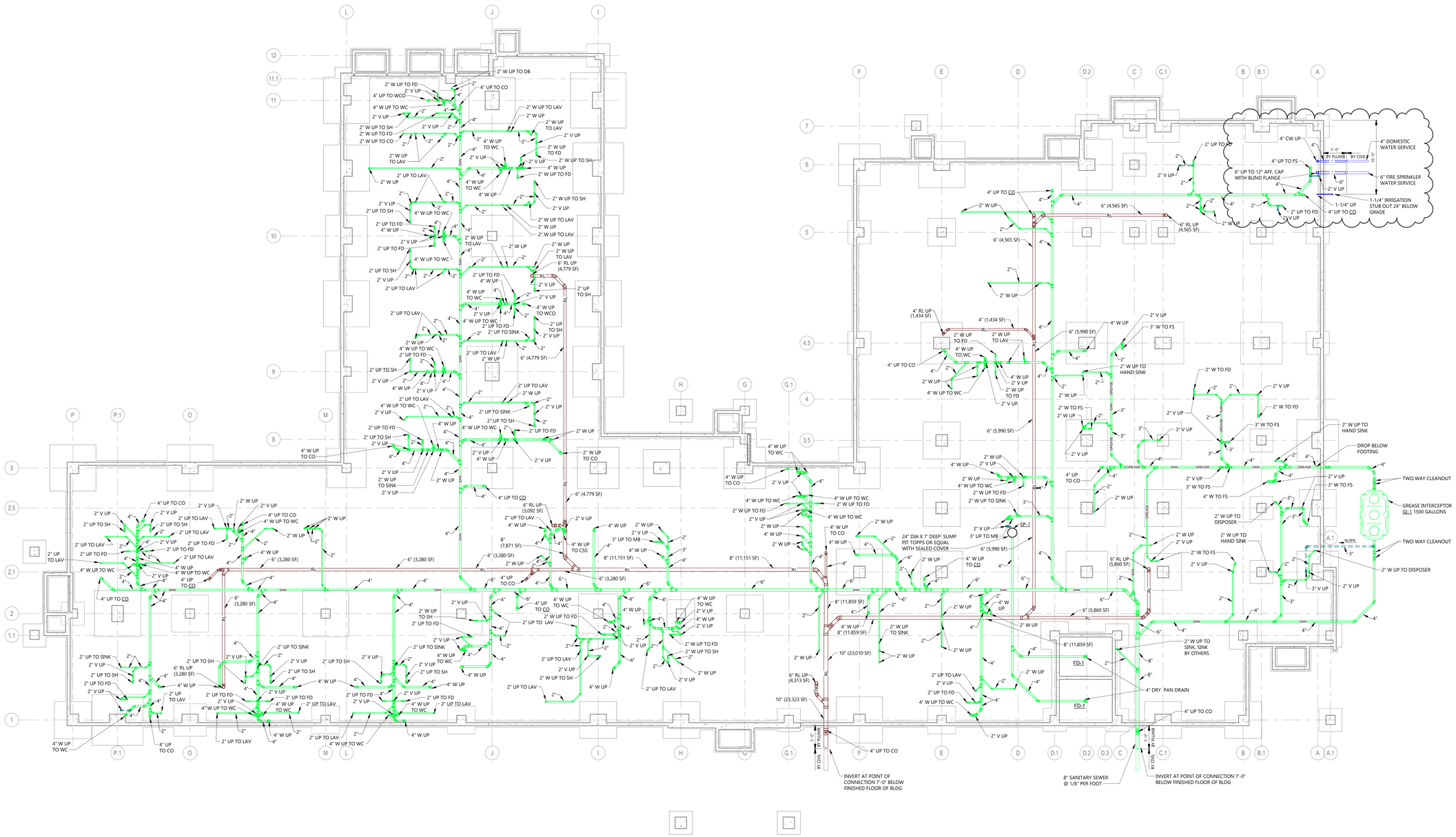

1 P200 UNDERGROUND PLUMBING PLAN
1/8" = 1'-0"

EAPC
Architecture | Engineering
Interior Design | Industrial
TELEPHONE 701.258.3116
116 W. Main Ave., Suite A, Bismarck ND 58501
www.eapc.net

CONSULTANTS

CLIENT
VIBRA HOSPITALS OF THE CENTRAL DAKOTAS

PROJECT DESCRIPTION
BISMARCK REHABILITATION HOSPITAL

CITY BISMARCK
STATE NORTH DAKOTA

ISSUE DATES

MARK	DESCRIPTION	DATE
1	ADDENDUM #1	02/09/2026
CD	ISSUED FOR BIDDING	01/29/2026

PROJECT NO: 20251200
DRAWN BY: CBL
CHECKED BY: TMB

COPYRIGHT:
All plans, specifications, computer files, field data, notes and other documents and instruments prepared by EAPC as instruments of service shall remain the property of EAPC. EAPC shall retain all common law, statutory and other reserved rights, including the copyright there to.

STAMP

REGISTERED PROFESSIONAL ENGINEER
TYLER COULOMBE
PE-7492
DATE 02/06/2026
NORTH DAKOTA

Drawing Title
UNDERGROUND PLUMBING PLAN

P200

Revit Version 2025
Plot Date: 2/6/2026 11:31:27 AM

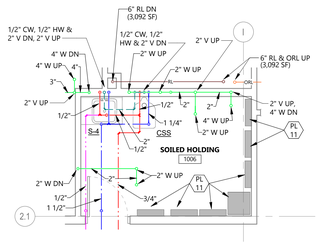

3 P201 ENLARGED PLUMBING PLAN - 1006
1/4" = 1'-0"

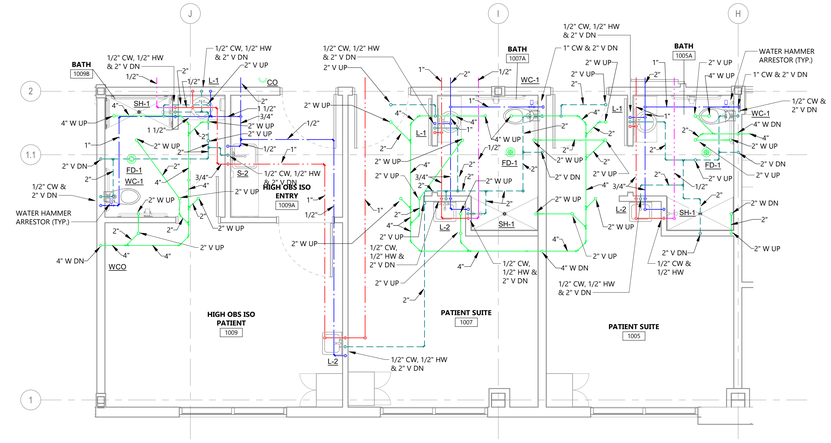

2 P201 ENLARGED PLUMBING PLAN - 1005, 1007, 1009
1/4" = 1'-0"

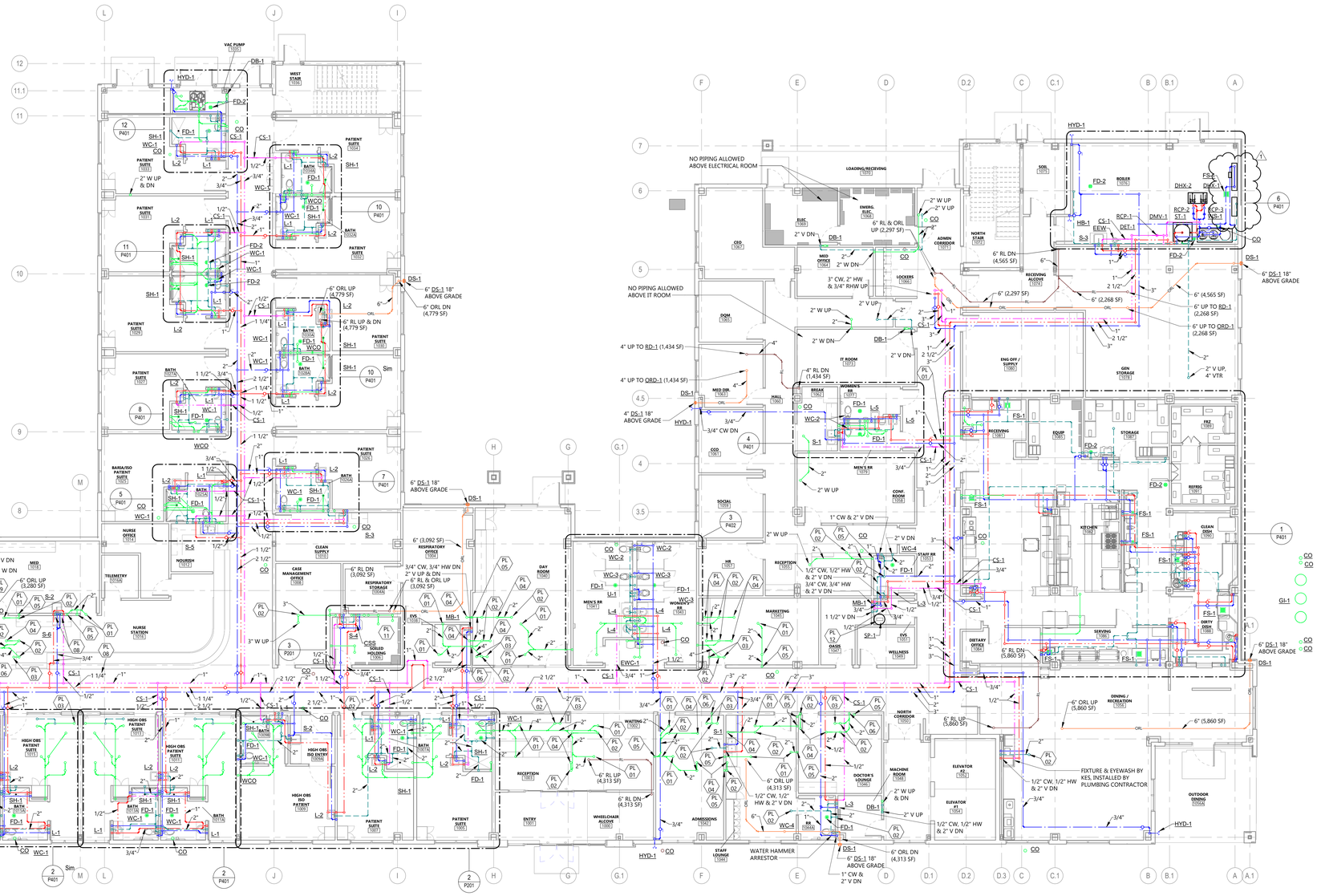

1 P201 FIRST FLOOR PLUMBING PLAN
1/8" = 1'-0"

PLUMBING FIXTURE CONNECTION SCHEDULE

ITEM	CONNECTIONS - INCHES			
NO.	WASTE	VENT	CW	HW
EEW	2"	1-1/2"	3/4"	3/4"
ELEC. WATER COOLER	2"	1-1/2"	1/2"	1/2"
FLOOR DRAIN	SEE PLAN	SEE PLAN	-	-
FLOOR SINK	SEE PLAN	SEE PLAN	-	-
WALL HYDRANT / HOSE BIBB	-	-	3/4"	-
LAVATORY	2"	1-1/2"	1/2"	1/2"
LAUNDRY TUB	2"	1-1/2"	3/4"	3/4"
MOP BASIN	3"	1-1/2"	3/4"	3/4"
SINK	2"	1-1/2"	1/2"	1/2"
SHOWER	2"	1-1/2"	1/2"	1/2"
URINAL	2"	1-1/2"	3/4"	-
WATER CLOSET (FV)	4"	2"	1"	-
WMT	2"	1-1/2"	3/4"	3/4"

NOTE:
1. ALL UNDERGROUND WASTE & VENT PIPING SHALL BE 2" MINIMUM.
2. VENT CONNECTIONS INDICATED ARE MINIMUM REQUIRED BY CODE IF HORIZONTAL VENT PIPE RUNS OVER 1/3 OF CODE ALLOWED DISTANCE PIPE SHALL BE INCREASED TO NEXT SIZE AS REQUIRED.

GENERAL NOTES

1. PROVIDE WALL CLEANOUTS AT THE BASES OF ALL RAINLEADERS & SANITARY SEWER STACKS AT 100'-0" MAXIMUM.
2. PROVIDE EXPANSION LOOPS ON DOMESTIC HOT & RECIRCULATING HOT WATER AT 100'-0" MAXIMUM.
3. ALL SHUTOFF VALVES SHALL BE INSTALLED IN ACCESSIBLE CEILINGS (LAY-IN TILE CEILINGS) TYP.
4. COORDINATE HOLDOUTS IN CONCRETE AS REQUIRED.
5. PROVIDE ACCESS PANELS TO ALL WATER HAMMER ARRESTORS ABOVE HARD CEILINGS

KEYNOTE LEGEND:

< < < INDICATES KEYNOTE ON PLAN

PL 01 2" WASTE UP TO SINK/LAV.
PL 02 2" VENT UP.
PL 03 4" WASTE UP.
PL 04 2" WASTE UP TO FLOOR DRAIN/SHOWER.
PL 05 2" WASTE DOWN.
PL 06 4" WASTE DOWN.
PL 07 2" VENT UP, 4" WASTE DOWN.
PL 08 1/2" CW, 1/2" HW & 2" VENT DOWN.
PL 09 1" CW & 2" WASTE DOWN.
PL 10 1/2" CW & 1/2" HW DOWN.
PL 11 NO PIPING ALLOWED ABOVE ELECTRICAL PANELS.
PL 12 24" DIA X 7' DEEP SUMP PIT TOPPS OR EQUAL WITH SEALED COVER

EAPC
Architecture | Engineering
Interior Design | Industrial
TELEPHONE 701.258.3116
116 W. Main Ave., Suite A, Bismarck ND 58501
www.eapc.net

CONSULTANTS

CLIENT
VIBRA HOSPITALS OF THE CENTRAL DAKOTAS

PROJECT DESCRIPTION
BISMARCK REHABILITATION HOSPITAL

CITY BISMARCK
STATE NORTH DAKOTA

ISSUE DATES

MARK	DESCRIPTION	DATE
1	ADDENDUM #1	02/09/2026
CD	ISSUED FOR BIDDING	01/29/2026

PROJECT NO: 20251200
DRAWN BY: CBL
CHECKED BY: TMB

COPYRIGHT:
All plans, specifications, computer files, field data, notes and other documents and instruments prepared by EAPC as instruments of service shall remain the property of EAPC. EAPC shall retain all common law, statutory and other reserved rights, including the copyright there to.

STAMP

REGISTERED PROFESSIONAL ENGINEER
TYLER COULOMBE
PE-7492
DATE 02/06/2026
NORTH DAKOTA

Drawing Title
FIRST FLOOR PLUMBING PLAN

P201

Revit Version: 2026
Plot Date: 02/09/26 1:11:39 AM

GENERAL NOTES

1. PROVIDE WALL CLEANOUTS AT THE BASES OF ALL RAINLEADERS & SANITARY SEWER STACKS AT 100'-0" MAXIMUM.
2. PROVIDE EXPANSION LOOPS ON DOMESTIC HOT & RECIRCULATING HOT WATER AT 100'-0" MAXIMUM.
3. ALL SHUTOFF VALVES SHALL BE INSTALLED IN ACCESSIBLE CEILINGS (LAY-IN TILE CEILINGS) TYP.
4. COORDINATE HOLDOUTS IN CONCRETE AS REQUIRED.
5. PROVIDE ACCESS PANELS TO ALL WATER HAMMER ARRESTORS ABOVE HARD CEILINGS

PLUMBING FIXTURE CONNECTION SCHEDULE

ITEM NO.	CONNECTIONS - INCHES WASTE	VENT	CW	HW
EEW	2"	1-1/2"	3/4"	3/4"
ELEC. WATER COOLER	2"	1-1/2"	1/2"	1/2"
FLOOR DRAIN	SEE PLAN	SEE PLAN	-	-
FLOOR SINK	SEE PLAN	SEE PLAN	-	-
WALL HYDRANT / HOSE BIBB			3/4"	-
LAVATORY	2"	1-1/2"	1/2"	1/2"
LAUNDRY TUB	2"	1-1/2"	3/4"	3/4"
MOP BASIN	3"	1-1/2"	3/4"	3/4"
SINK	2"	1-1/2"	1/2"	1/2"
SHOWER	2"	1-1/2"	1/2"	1/2"
URINAL	2"	1-1/2"	3/4"	-
WATER CLOSET (FV)	4"	2"	1"	-
WMT	2"	1-1/2"	3/4"	3/4"

NOTE:
1. ALL UNDERGROUND WASTE & VENT PIPING SHALL BE 2" MINIMUM.
2. VENT CONNECTIONS INDICATED ARE MINIMUM REQUIRED BY CODE IF HORIZONTAL VENT PIPE RUNS OVER 1/3 OF CODE ALLOWED DISTANCE PIPE SHALL BE INCREASED TO NEXT SIZE AS REQUIRED.

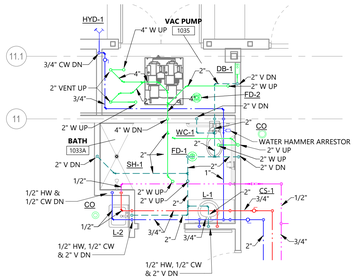

12 P401 ENLARGED PLUMBING PLAN - 1033A & 1035
1/4" = 1'-0"

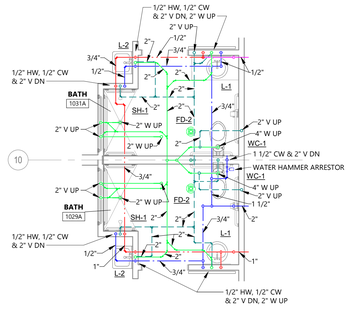

11 P401 ENLARGED PLUMBING PLAN - 1029A & 1031A
1/4" = 1'-0"

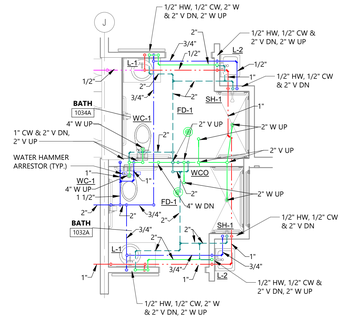

10 P401 ENLARGED PLUMBING PLAN - 1032A & 1034A
1/4" = 1'-0"

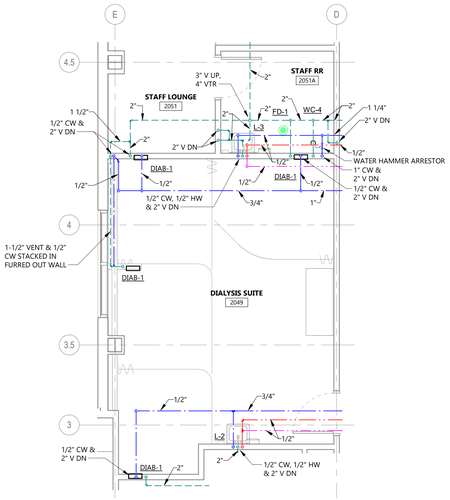

9 P401 ENLARGED PLUMBING PLAN - 2049, 2051 & 2051A
1/4" = 1'-0"

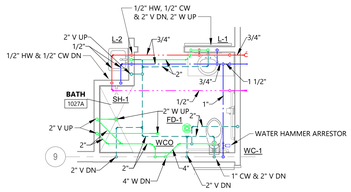

8 P401 ENLARGED PLUMBING PLAN - 1027A
1/4" = 1'-0"

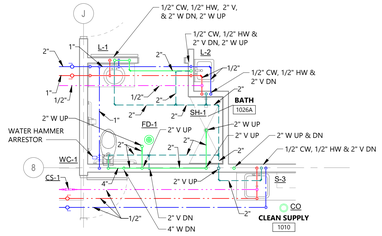

7 P401 ENLARGED PLUMBING PLAN - 1010 & 1026A
1/4" = 1'-0"

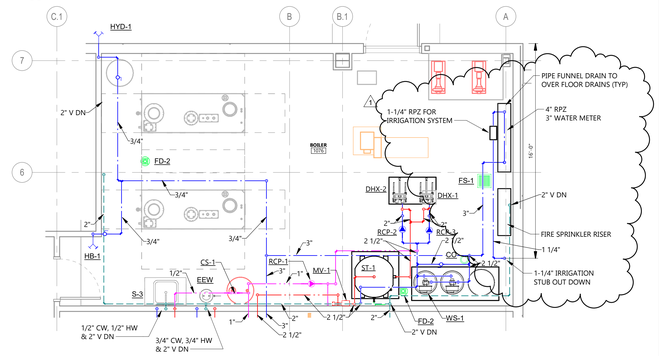

6 P401 ENLARGED MECHANICAL ROOM 1076 PLUMBING PLAN
1/4" = 1'-0"

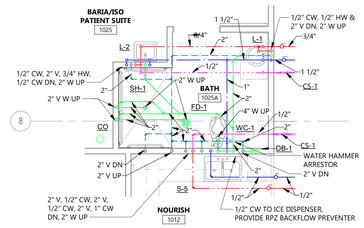

5 P401 ENLARGED PLUMBING PLAN - 1012 & 1025A
1/4" = 1'-0"

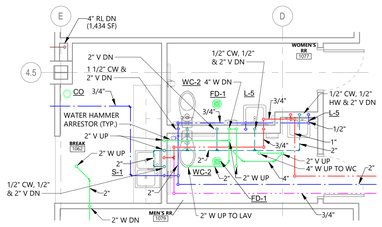

4 P401 ENLARGED PLUMBING PLANS - 1062, 1077 & 1079
1/4" = 1'-0"

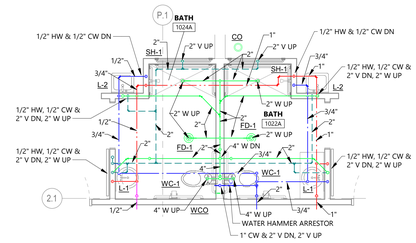

3 P401 ENLARGED PLUMBING PLAN - 1022A & 1024A
1/4" = 1'-0"

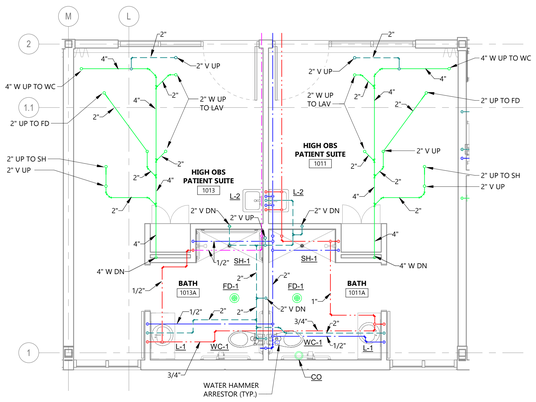

2 P401 ENLARGED PLUMBING PLAN - TYPICAL HIGH OBS PATIENT ROOMS
1/4" = 1'-0"

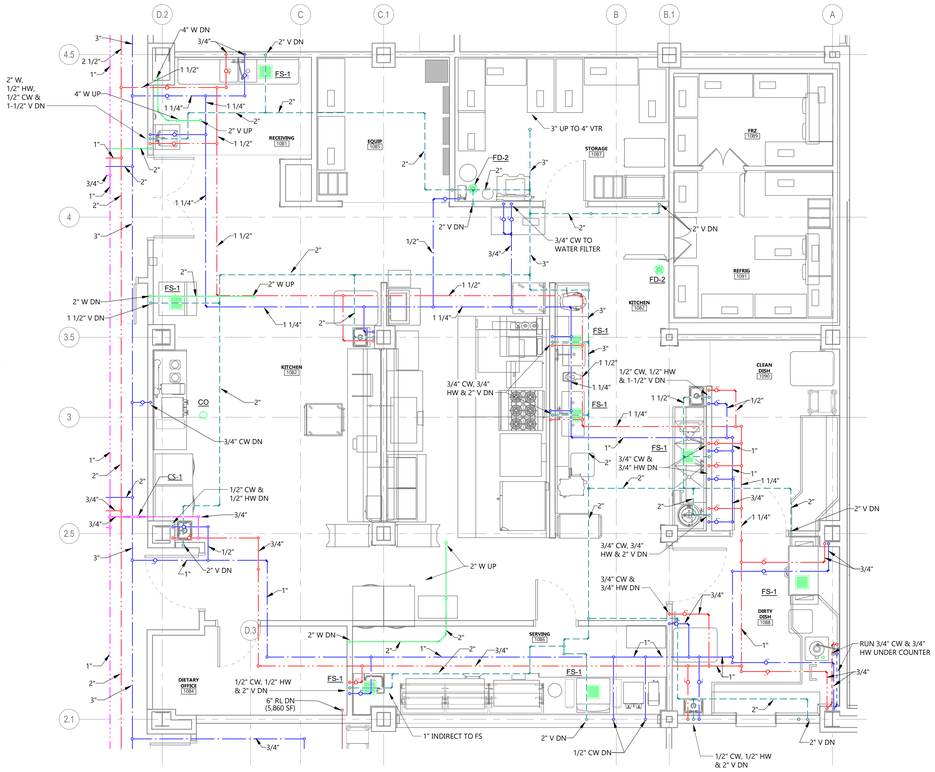

1 P401 ENLARGED KITCHEN PLUMBING PLAN
1/4" = 1'-0"

EAPC
Architecture | Engineering
Interior Design | Industrial
TELEPHONE 701.258.3116
116 W. Main Ave., Suite A, Bismarck ND 58501
www.eapc.net

CONSULTANTS

CLIENT
VIBRA HOSPITALS OF THE CENTRAL DAKOTAS

PROJECT DESCRIPTION
BISMARCK REHABILITATION HOSPITAL

CITY BISMARCK
STATE NORTH DAKOTA

ISSUE DATES

MARK	DESCRIPTION	DATE
1	ADDENDUM #1	02/09/2026
CD	ISSUED FOR BIDDING	01/29/2026

PROJECT NO: 20251200
DRAWN BY: CBL
CHECKED BY: TMB

COPYRIGHT:
All plans, specifications, computer files, field data, notes and other documents and instruments prepared by EAPC as instruments of service shall remain the property of EAPC. EAPC shall retain all common law, statutory and other reserved rights, including the copyright there to.

STAMP

REGISTERED PROFESSIONAL ENGINEER
TYLER COULOMBE
PE-7842
DATE:02/06/2026
NORTH DAKOTA

Drawing Title
ENLARGED PLUMBING PLANS

P401

Revit Version: 2025
Plot Date: 02/10/2026 - 11:11:48 AM

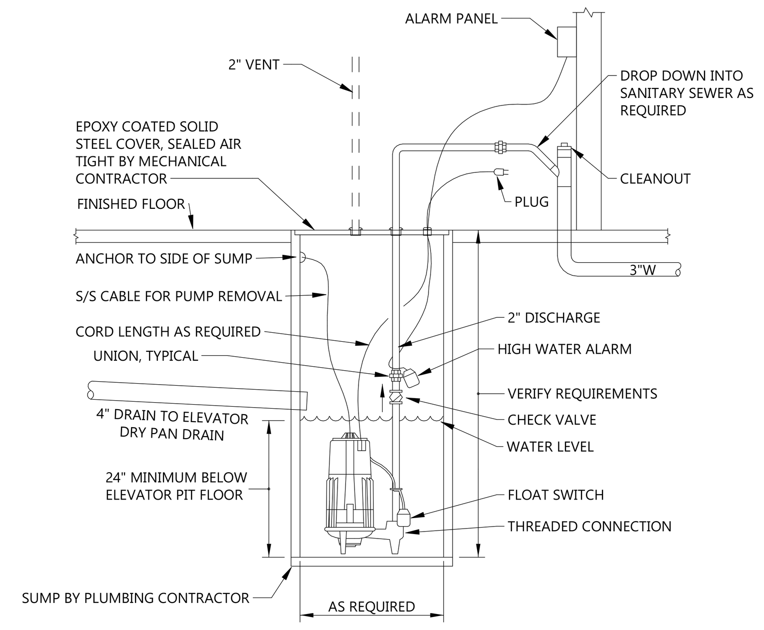

6 P801 DRAIN TILE SUMP PUMP DETAIL
NOT TO SCALE

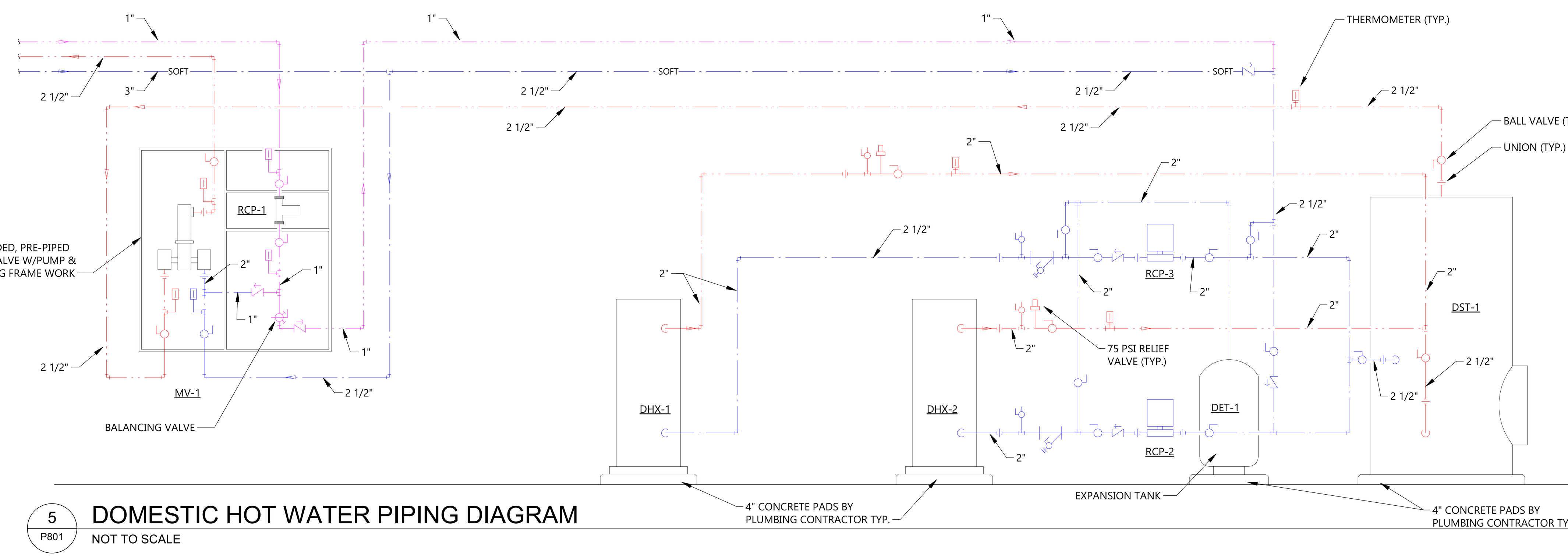

5 P801 DOMESTIC HOT WATER PIPING DIAGRAM
NOT TO SCALE

PLUMBING FIXTURE CONNECTION SCHEDULE

ITEM NO.	CONNECTIONS - INCHES WASTE	VENT	CW	HW
EEW	2"	1-1/2"	3/4"	3/4"
ELEC. WATER COOLER	2"	1-1/2"	1/2"	1/2"
FLOOR DRAIN	SEE PLAN	SEE PLAN	-	-
FLOOR SINK	SEE PLAN	SEE PLAN	-	-
WALL HYDRANT / HOSE BIBB	-	-	3/4"	-
LAVATORY	2"	1-1/2"	1/2"	1/2"
LAUNDRY TUB	2"	1-1/2"	3/4"	3/4"
MOP BASIN	3"	1-1/2"	3/4"	3/4"
SINK	2"	1-1/2"	1/2"	1/2"
SHOWER	2"	1-1/2"	1/2"	1/2"
URINAL	2"	1-1/2"	3/4"	-
WATER CLOSET (FV)	4"	2"	1"	-
WMT	2"	1-1/2"	3/4"	3/4"

NOTE:
1. ALL UNDERGROUND WASTE & VENT PIPING SHALL BE 2" MINIMUM.
2. VENT CONNECTIONS INDICATED ARE MINIMUM REQUIRED BY CODE IF HORIZONTAL VENT PIPE RUNS OVER 1/3 OF CODE ALLOWED DISTANCE PIPE SHALL BE INCREASED TO NEXT SIZE AS REQUIRED.

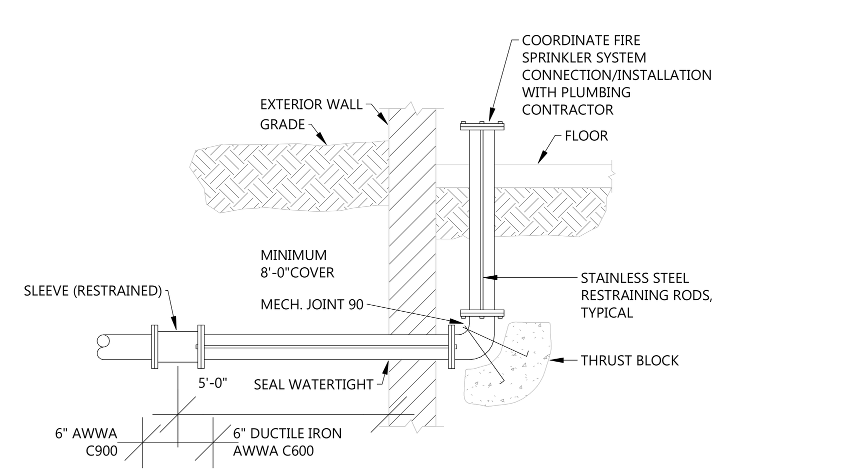

4 P801 FIRE SPRINKLER SERVICE THRUST BLOCK DETAIL
NOT TO SCALE

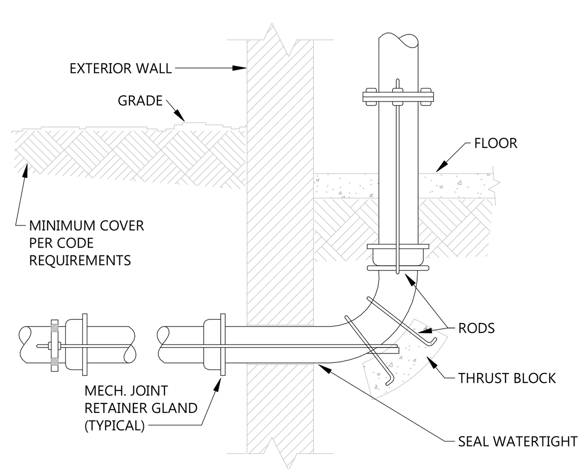

3 P801 WATER SERVICE DETAIL
NOT TO SCALE

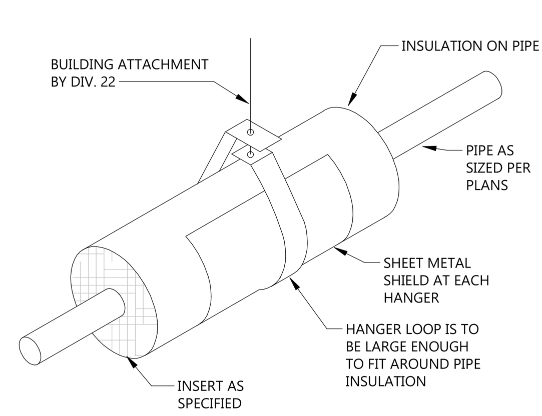

2 P801 TYPICAL PIPE HANGER DETAIL
NOT TO SCALE

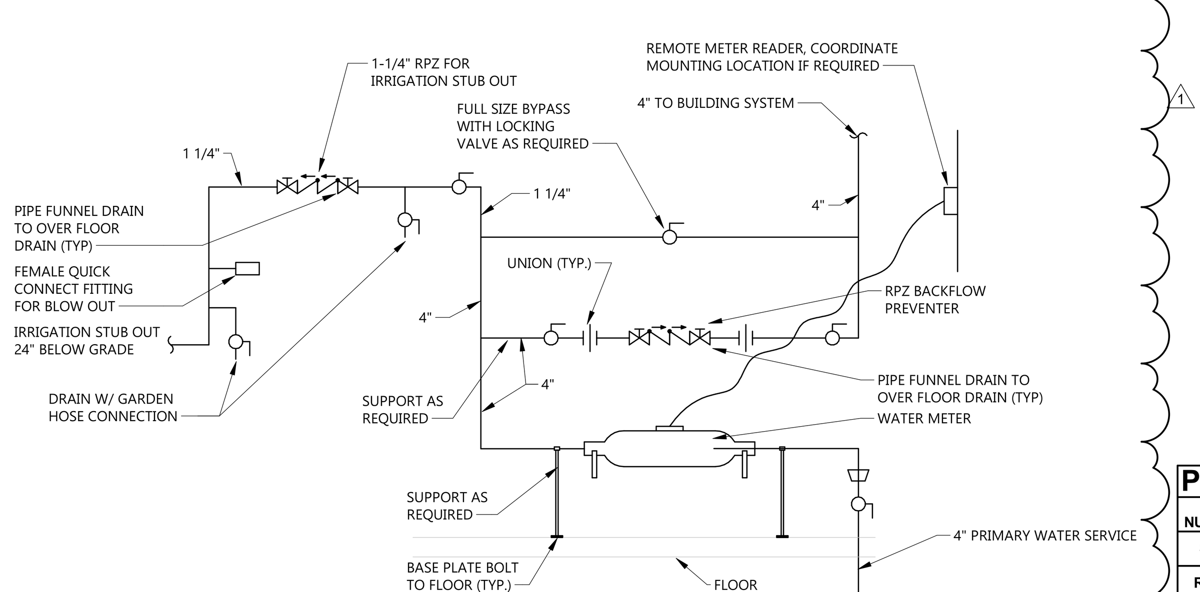

NOTES:
1. PLUMBING CONTRACTOR SHALL PROVIDE 3/4" THICK CLOSED CELL INSULATION AROUND WATER METER. INSULATION SHALL BE SIMILAR TO ARMAFLEX AP.
2. PIPE DRAINS TO COVER FLOOR DRAINS.

1 P801 WATER METER DETAIL
NOT TO SCALE

DOMESTIC WATER BALANCING VALVE SCHEDULE

ITEM NUMBER	MANUFACTURER	MODEL #	SERVICE	CONNECTION SIZE	CLOSING TEMP	COMMENTS
CS-1	CIRCUIT SOLVER	CSUAS-CV1	DOMESTIC WATER	3/4"	115°F	1, 2

1. ANSI-61 RATED
2. PROVIDE WITH LINE SIZE ISOLATION VALVES, UNIONS AND STRAINER & PER DETAIL ON DRAWINGS.

DOMESTIC WATER STORAGE TANK

ITEM NUMBER	MANUFACTURER	SERIES	MODEL #	TANK	LOCATION	STORAGE CAPACITY	WATER TEMP	COMMENTS
DST-1	PVI	CONQUEST	L 215A-TR	100% AQUAPLEX	MECHANICAL ROOM	215 GALLONS	140	1,2,3,4

1. ASME RATED.
2. PIPE RELIEF VALVE OVER FLOOR DRAIN.
3. TANK SHALL HAVE TWO SIDE RECIRCULATING CONNECTONS, COLD WATER INLET/BUILDING RETURN CONNECTION & DRAIN VALVE.
4. PROVIDE A BELL & GOSSETT MODEL PTA-42V EXPANSION TANK WITH 22 GALLON TANK VOLUME AND 14 GALLON ACCEPTANCE VOLUME FOR DOMESTIC WATER HEATING SYSTEM DET-1.

PLUMBING PUMP SCHEDULE

NUMBER	SERVICE	MFGR.	MODEL	PUMP TYPE	GPM	TOTAL HEAD	MOTOR CHARACTERISTICS RPM	HP	VOLTS/PHASE	COMMENTS
SP-1	ELEVATOR DRY PAN DRAIN PUMP	ZOELLER	OIL GUARD N153	SUBMERSIBLE	50	20'	3,450	1/2	120/1	5
RCP-1	DOMESTIC WATER CIRCULATOR	BELL & GOSSETT	NBF-36	INLINE	4.5	24'	2,950	270 W	120/1	1, 2, 3, 4
RCP-2	DOMESTIC WATER TANK CIRCULATOR	BELL & GOSSETT	NBF-36	INLINE	12	22'	2,950	270 W	120/1	1, 2, 3, 4
RCP-3	DOMESTIC WATER TANK CIRCULATOR	BELL & GOSSETT	NBF-36	INLINE	12	22'	2,950	270 W	120/1	1, 2, 3, 4

1. ITT BELL & GOSSET 100% LEAD-FREE BRONZE PUMP OR STAINLESS STEEL
2. INSTALL WITH ISOLATION VALVES & UNIONS AS REQUIRED FOR PUMP MAINTENANCE.
3. PUMP SHALL HAVE 3 SPEED CONTROL, PUMP TO RUN 24/7 CONTINOUSLY, DISCONNECT BY DIV. 26.
4. PUMP SHALL BE SUITABLE FOR DOMESTIC POTABLE HOT WATER.
5. PROVIDE WITH SIMPLEX PUMP CONTROLLER, CHECK VALVES, FLOATS AND ALARM.

MEDICAL VACUUM PUMP

TAG	MANUFACTURER	MODEL NUMBER	NUMBER OF PUMPS	TOTAL SCFM @ 19" Hg	RECEIVER GALLONS	ELECTRICAL QTY / HP	V / PH	FLA	MCA	MOP	NOTES:
VP-1	BEACONMEDAES	VDV05BD-080V-D	2	18.7 (1 MOTOR) 37.4 (2 MOTORS)	80	(2) 5HP	480/3	7.5 (1 MOTOR) 15.8 (2 MOTORS)	18.1	24.7 AMPS	1, 2, 3, 4, 5, 6

1. SCFM INDICATED WITH ONE & TWO MOTORS FOR CLARITY OF CAPACITY.
2. DUPLEX PUMPS MAY OPERATE TOGETHER AT SAME TIME.
3. SYSTEM SHALL BE SKID MOUNTED WITH ISOLATORS.
4. PROVIDE WITH TOTAL ALERT CONTROL SYSTEM.
5. PROVIDE W/ 65 kA SCCR RATING.
6. PROVIDE SINGLE POINT POWER W/ DISCONNECT.

DIGITAL MIXING VALVE SCHEDULE

ITEM NUMBER	MANUFACTURER	MODEL #	LOCATION	CW INLET	HW INLET	HW OUTLET	PRESSURE DROP (PSI)	GPM FLOW	ELECTRICAL	NOTES:
MV-1	LAWLER	NEPTUNE EMX 150 RP	MECHANICAL ROOM	40°F	140°F	120°F	3.1	50	120/1	1, 2, 3

1. PROVIDE SHUT-OFF VALVES ON INLETS & OUTELTS.
2. STAINLESS STEEL DIGITAL MIXING VALVE, 1-1/2" INLETS & OUTLETS, CHECK VALVES, BALANCING VALVES & FACTORY PIPED 1" RECIRC. ON UNITSTRUCT FRAME.
3. PROVIDE CONTROL BOX IN NEMAX 4 ENCLOSURE WITH 4 FT. 120 VAC CORD & PLUG.

DOMESTIC HOT WATER PLATE & FRAME HEAT EXCHANGER SCHEDULE

TAG	MANUFACTURER	MODEL	FLUID	EWT	LWT	GPM	PD	MBH	LOAD SIDE (DOMESTIC HOT WATER) FLUID	GPM	EWT	LWT	PD	PLATES	NOTES:
DHX-1	BELL & GOSSETT	GPX AP20-DW	40% PG SOLUTION	140	110	41.2	11.4'	569	WATER	12	40	135	1'	49	1, 2, 3
DHX-2	BELL & GOSSETT	GPX AP20-DW	40% PG SOLUTION	140	110	41.2	11.4'	569	WATER	12	40	135	1'	49	1, 2, 3

1. PROVIDE HEAT EXCHANGER WITH SAFETY RELIEF VALVE SIZED FOR MAXIMUM MBH.
2. PROVIDE DOUBLE WALL GASKETED PLATE HEAT EXCHANGER WITH 84.64 SF SURFACE AREA, 0.0005 FOULING FACTOR
3. DIMENSIONS: 15.75"L X 12.12"W x 42"H

WATER SOFTENER SCHEDULE

ITEM NO.	LOCATION	MANUFACTURER	MODEL NO.	TOTAL CAPACITY GRAINS	CONT. GPM/ PRESSURE LOSS	PEAK GPM PRESSURE LOSS	BACKWASH GPM	CONNECTION SIZE (IN/OUT)	CU. FT RESIN (PER TANK)	RESIN TANK SIZE	BRINE TANK SIZE	VOLTS/ PH	NOTES
WS-1	MECHANICAL ROOM	WATER CONTROLS	LF-150X-TWIM	300,000	50/3 PSI	120/15PSI	5	2"	(5) 10 CF TOTAL	(2) 18" DIA.x79" H	24" DIA.x 50"H	120/1	1,2,3,4

NOTES:
1. PROVIDE DEDICATED ELECTRICAL CIRCUIT.
2. VALVE (2 TOTAL) SHALL BE PRE-WIRED WITH 2-PRONG PLUG, WITH INLINE 5 AMP BREAKER FOR GFI OUTLET FOR EACH PLUG.
3. WATER SOFTENER SYSTEM SHALL BE FACTORY PLUMBED WITH AUTOMATIC CONTROLS, 6
4. PIPE 3/4" BACKWASH DRAIN TO OVER FLOOR DRAIN.

PLUMBING FIXTURE SCHEDULE

ITEM NO.	MANUFACTURER	MODEL NO.	DESCRIPTION	CONNECTIONS - INCHES WASTE	VENT	CW	HW	REMARKS
CO	ZURN	Z1400	CAST IRON BODY, ADJUSTABLE COLLAR, NICKEL BRONZE TOP, ABS TAPERED PLUG	SEE PLANS				SEE PLANS FOR PIPE SIZES
CSS	AMERICAN STANDARD AMERICAN STANDARD AMERICAN STANDARD ZURN	9504.999.020 710098-201.081 7832504.075 Z60843-BWN	VITREOUS CHINA CLINIC SERVICE SINK, FLOOR MOUNTED, BOTTOM OUTLET, SIPHON JET, 6.5 GPF 28"x14"x10" PEDESTAL BASE (INSTALLED BY PLUMBING CONTRACTOR) RIM GUARD EXPOSED FLUSH VALVE W/ BEDPAN WASHER & SERVICE SINK FAUCET	4"	2"	1-1/4"	3/4"	INSTALL THE PEDESTAL BASE TO RAISE CLINIC SERVICE SINK 10" HIGHER ADJUST WALL CW & HW ROUGH INS ACCORDINGLY
DB-1	OATEY	MODA 37973	AUXILIARY DRAIN OUTLET BOX, FIRE RATED RECESSED BOX, WITH COVER PVC RESIN & INTUMESCENT PAD ATTACHED SOLID FACEPLATE FOR OUTLET BOX	2"	2"			
DIAB-1	ACORN	CARE-WARE 8190	DIALYSIS BOX - 14 GA TYPE 316 STAINLLES STEEL ENCLOSURE WITH WELDED SEAMS GROUND SMOOTH, HINGED DOOR WITH LOCK, 304 STAINLESS STEEL WALL FLANGE 2" DRAIN, ONE 1/2" PVC BALL VALVE WITH 3/4" SUPPLY INLET CONNECTION AND 3/4" SUPPLY INLET CONNECTION & 3/4" OUTLET MALE HOSE THREAD, DISCHARGE HOSE BRACKET WITH RUBBER GROMMET FOR USE WITH DIAYSIS MACHINES THAT USE RO OR DI WATER MIXED WITH DIALSATE SALINE CONCENTRATE	2"	1-1/2"	1/2"		
DS-1	ZURN	Z199	CAST BRONZE DOWNSPOUT NOZZLE W/ FLANGE	VARIES	VARIES			INSTALL 18" ABOVE GRADE
EEW	STINGRAY	T2230	WALL MOUNTED S.S. EYEWASH W/ INTEGRAL MIXING VALVE, PVC SPRAY HEADS W/ PVC DUST CAPS, FIRST AID RED ABS BOWL	2"	1-1/2"	3/4"	3/4"	TRAP & PIPE 1" DRAIN INTO SANITARY SEWER
EWC-1	ELKAY	LZSTLG8WSLK	WALL HUNG, BI-LEVEL ADA DUAL STATION WATER COOLER, STAINLESS STEEL BASIN, LIGHT GRAY UPPER & LOWER SHROUDS, INTEGRAL 3000 GALLON FILTRATION SYSTEM, 6 REPLACEMENT FILTERS, BOTTLE FILLING STATION	2"	1-1/2"	1/2"		ADA COMPLIANT, 8 GPH, 120/1, 6.0 FLA,
FD-1	ZURN	Z415B	CAST IRON BODY, ADJUSTABLE COLLAR, NICKEL BRONZE ROUND STRAINER	VARIES	VARIES			SEE PLANS FOR PIPE SIZES, PROVIDE PROVIDE DEEP SEAL "P" TRAP
FD-2	ZURN	Z415I	CAST IRON BODY, ADJUSTABLE COLLAR, NICKEL BRONZE ROUND STRAINER, INSTALL WITH RECESS FLUSH WITH FLOOR	2"	1-1/2"			SEE PLANS FOR PIPE SIZES PROVIDE DEEP SEAL "P" TRAP
FS-1	ZURN	Z1750	STAINLESS STEEL FLOOR SINK, 12"x12"x6" DEEP SUMP, STAINLESS STEEL INTERIOR DOME, STRAINER, 1/2 GRATE SUITABLE FOR APPLICATION	SEE PLANS				SEE PLANS FOR PIPE SIZES
GI-1	SCHIER	GB-1500	POLYETHYLENE GREASE INTERCEPTOR, 1500 GALLON LIQUID CAPACITY, 10,061 LBS GREASE CAPACITY @ 100 GPM FLOW, BUILT IN FLOW CONTROL WATER/GAS TIGHT COVER, 6" INLET/OUTLET, x" VENT	4"	3"			
HB-1	ZURN	Z1341XL	WALL HYDRANT w/ Z1399-VB VACUUM BREAKER, 3/4" GARDEN HOSE CONNECTION, ROUGH BRONZE EXTERIOR W/ METAL WHEEL HANDLE			3/4"		
HYD-1	ZURN	Z1321	CHROME PLATED, STAINLESS STEEL FACE w/ KEYED OPERATING LOCK INTEGRAL VACUUM BREAKER, FREEZELESS, 3/4" GARDEN HOSE CONNECTION			3/4"		MOUNT 24" AFF ON EXTERIOR OF BUILDING LOOSE KEY OPERATES HYDRANT
HYD-2	WOODFORD	SRH-MS	ROOF MOUNTED, AUTOMATIC DRAINING, FREEZELESS HYDRANT WITH DUAL CHECK BACKFLOW PREVENTER			3/4"		PROVIDE COMPLETE ROOF HYDRANT & MOUNTING SYSTEM
L-1	BY OTHERS CHICAGO TRUEBRO	N/A 786-E35VPCABCP LAVGUARD	INTERGRAL SOLID SURFACE SINK & COUNTERTOP BY OTHERS, SEE ARCH PLANS PROVIDE GRID STRAINER, TAILPIECE, STOPS DECK MOUNTED MANUAL FAUCET, 8" CENTERS, 8" GOOSENECK SPOUT, 4"WRISTBLADE HANDLES DRAIN, CW & HW PIPE COVERS, STAIN RESISTANT PVC, WHITE COLOR	2"	1-1/2"	1/2"	1/2"	1.5 GPM LAMINAR FLOW AERATOR
L-2	AMERICAN STANDARD CHICAGO TRUEBRO	LUCERNE 0356.015 786-E35VPCABCP LAVGUARD	WALL MOUNTED, VITREOUS CHINA, FRONT OVERFLOW, 8" CENTERS PROVIDE GRID STRAINER, TAILPIECE, STOPS DECK MOUNTED MANUAL FAUCET, 8" CENTERS, 8" GOOSENECK SPOUT, 4"WRISTBLADE HANDLES DRAIN, CW & HW PIPE COVERS, STAIN RESISTANT PVC, WHITE COLOR	2"	1-1/2"	1/2"	1/2"	ADA (PUBLIC TOILET ROOMS) PROVIDE FLOOR MOUNTED CARRIER 1.5 GPM LAMINAR FLOW AERATOR TEMPERATURE CONTROL HANDLE KIT
L-3	AMERICAN STANDARD CHICAGO TRUEBRO	LUCERNE 0356.015 786-E35VPCABCP LAVGUARD	WALL MOUNTED, VITREOUS CHINA, FRONT OVERFLOW, 8" CENTERS PROVIDE GRID STRAINER, TAILPIECE, STOPS DECK MOUNTED MANUAL FAUCET, 8" CENTERS, 8" GOOSENECK SPOUT, 4"WRISTBLADE HANDLES DRAIN, CW & HW PIPE COVERS, STAIN RESISTANT PVC, WHITE COLOR	2"	1-1/2"	1/2"	1/2"	ADA (PUBLIC TOILET ROOMS) PROVIDE FLOOR MOUNTED CARRIER 1.5 GPM LAMINAR FLOW AERATOR
L-4	BY OTHERS CHICAGO	N/A H-T11H-13ABCPT	INTERGRAL SOLID SURFACE SINK & COUNTERTOP BY OTHERS, SEE ARCH PLANS PROVIDE GRID STRAINER, TAILPIECE, STOPS DECK MOUNTED TOUCH FREE FAUCET, SINGLE HOLE, CHROME PLATED, INTEGRAL ASSE 1070 RATED MIXING VALVE & ABOVE DECK ELECTRONICS 6VDC REPLACEABLE INTERNAL BATTERY	2"	1-1/2"	1/2"	1/2"	
L-5	AMERICAN STANDARD CHICAGO	LUCERNE 0356.421 H-T11H-13ABCPT	WALL MOUNTED, VITREOUS CHINA, FRONT OVERFLOW, SINGLE HOLE PROVIDE GRID STRAINER, TAILPIECE, STOPS DECK MOUNTED TOUCH FREE FAUCET, SINGLE HOLE, CHROME PLATED, INTEGRAL ASSE 1070 RATED MIXING VALVE & ABOVE DECK ELECTRONICS 6VDC REPLACEABLE INTERNAL BATTERY	2"	1-1/2"	1/2"	1/2"	1.5 GPM LAMINAR FLOW AERATOR TEMPERATURE CONTROL HANDLE KIT
MB-1	MUSTEE ZURN	63M Z843M4-XL	24"x24"x10" FLOOR SET, MOLDED STONE, STAINLESS STEEL WALL GUARDS VINYL BUMPER GUARDS, 30" HOSE & BRACKET CHROME PLATED FAUCET WITH INTEGRAL VACUUM BREAKER PAIL HOOK, WALL BRACE, 3/4" THREADED OUTLET	3"	1-1/2"	3/4"	3/4"	MOP HOLDER, FLAT STAINLESS STEEL STRAINER
S-1	ELKAY DELTA	ELUHAD311855 9159-AR-DST	UNDERMOUNT, DOUBLE COMPARTMENT, 18 GAUGE, TYPE 304 STAINLESS STEEL, UNDERCOATED SINK, PROVIDE BASKET STRAINERS DECK MOUNTED SINGLE HANDLE PULL-DOWN HIGH ARC KITCHEN MANUAL FAUCET 1.5 GPM, SINGLE TEMPERATURE CONTROL CERAMIC CARTRIDGE, QUICK CONNECT HOSES, CHROME PLATED CAST BRASS P-TRAPS	2"	1-1/2"	1/2"	1/2"	TWO 13.5X16X5.5 BOWLS ADA ARTIC STAINLESS FINISH CORDINATE PIPING W/ ARCH TRIM PANEL FOR SINK INSTALLATION
S-2	ELKAY CHICAGO	MFD115 786-GN8AE29ABCP	SELF RIMMING, DROP IN, SINGLE COMPARTMENT, 18 GAUGE, TYPE 304 STAINLESS STEEL, UNDERCOATED SINK, PROVIDE BASKET STRAINER DECK MOUNTED MANUAL FAUCET, 9" CENTERS,8"X13"H GOOSENECK SPOUT, CHROME PLATED BRASS 1.5 GPM, DUAL QUATURN CARTRIDGES, 4" WRISTBLADE HANDLES	2"	1-1/2"	1/2"	1/2"	ONE 21X17X5.5 BOWL ADA CORDINATE PIPING W/ ARCH TRIM PANEL FOR SINK INSTALLATION
S-3	ELKAY CHICAGO	MFD115 786-GN8AE29ABCP	UNDERMOUNT, SINGLE COMPARTMENT, 18 GAUGE, TYPE 304 STAINLESS STEEL, UNDERCOATED SINK, PROVIDE BASKET STRAINER DECK MOUNTED MANUAL FAUCET, 9" CENTERS,8"X13"H GOOSENECK SPOUT, CHROME PLATED BRASS 2.2 GPM, DUAL QUATURN CARTRIDGES, 4" WRISTBLADE HANDLES	2"	1-1/2"	1/2"	1/2"	ONE 21X17X5.5 BOWL ADA CORDINATE PIPING W/ ARCH TRIM PANEL FOR SINK INSTALLATION
S-4	ELKAY CHICAGO	MFD115 786-GN8AE29ABCP	UNDERMOUNT, SINGLE COMPARTMENT, 18 GAUGE, TYPE 304 STAINLESS STEEL, UNDERCOATED SINK, PROVIDE BASKET STRAINER DECK MOUNTED MANUAL FAUCET, 9" CENTERS,8"X13"H GOOSENECK SPOUT, CHROME PLATED BRASS 2.2 GPM, DUAL QUATURN CARTRIDGES, 4" WRISTBLADE HANDLES	2"	1-1/2"	1/2"	1/2"	ONE 21X17X5.5 BOWL ADA CORDINATE PIPING W/ ARCH TRIM PANEL FOR SINK INSTALLATION
S-5	ELKAY CHICAGO	ELUHAD311855 786-GN10AE3SWGABCP	UNDERMOUNT DOUBLE COMPARTMENT, 18 GAUGE, TYPE 304 STAINLESS STEEL, UNDERCOATED SINK, PROVIDE BASKET STRAINERS DECK MOUNTED MANUAL FAUCET, 10"X16"H GOOSENECK SPOUT, CHROME PLATED BRASS 2.2 GPM, DUAL QUATURN CARTRIDGES, 4" WRISTBLADE HANDLES	2"	1-1/2"	1/2"	1/2"	TWO 13.5X16X5.5 BOWLS ADA CORDINATE PIPING W/ ARCH TRIM PANEL FOR SINK INSTALLATION
S-6	ELKAY CHICAGO	ELUH191655 786-GN8AE29ABCP	UNDERMOUNT, SINGLE COMPARTMENT, 18 GAUGE, TYPE 304 STAINLESS STEEL, UNDERCOATED SINK, PROVIDE GRID STRAINER DECK MOUNTED MANUAL FAUCET, 9" CENTERS,8"X13"H GOOSENECK SPOUT, CHROME PLATED BRASS 1.5 GPM, DUAL QUATURN CARTRIDGES, 4" WRISTBLADE HANDLES	2"	1-1/2"	1/2"	1/2"	ONE 21X18,5X5.5 BOWL
SH-1	FIELD BUILT SHOWER ZURN CHICAGO FAUCET ORIGINS	BY OTHERS Z415I 2500-VOCCP 600-CP 151-ACP	FIELD BUILT SHOWER BY OTHERS CAST IRON BODY, ADJUSTABLE COLLAR, NICKEL BRONZE ROUND STRAINER, INSTALL WITH RECESS FLUSH WITH FLOOR PRESSURE BALANCED SHOWER VALVE W/ INTERGRAL SERVICE STOPS & CHECK VALVES, DIVERTER 2.5 GPM HANDHELD SHOWER, 60 STAINLESS STEEL HOSE, CHROME PLATER SHOWERHEAD	2"	1-1/2"	1/2"	1/2"	ENTIRE ASSEMBLY TO BE CHROME PLATED REFER TO ARCHITECTURAL ELEVATIONS FOR MOUNTING HEIGHT OF DIVERTER VALVE, GRAB BAR & FIXED SHOWERHEAD
ORD-1	ZURN	ZC100	LOW SILHOUETTE CAST IRON DOME, CAST IRON BODY, FLASHING COLLAR, UNDERDECK CLAMP, ADJUSTABLE EXTENSION SLEEVE, NO-HUB OUTLET	VARIES				PROVIDE OVERFLOW DAM 2" HIGHER THAN ROOF DRAIN
RD-1	ZURN	ZC100	LOW SILHOUETTE CAST IRON DOME, CAST IRON BODY, FLASHING COLLAR, UNDERDECK CLAMP, ADJUSTABLE EXTENSION SLEEVE, NO-HUB OUTLET	VARIES				
U-1	ZURN ZURN	5755 ZEMS6003AV-AS1-ULF	WALL HUNG URINAL, TOP SPUD, VITREOUS CHINA, CARRIER, 0.125 TO 1.0 GPF, 3/4" TOP SPUD SENSOR OPERATED, 6VDC BATTERY POWER, .125 GPF, DIAPHRAGM FLUSH VALVE	2"	1-1/2"	3/4"		INSTALL PER ARCHITECTURAL ELEVATIONS, VERIFY ADA HEIGHT REQUIREMENTS PRIOR TO INSTALLATION
WC-1	ZURN ZURN ZURN	Z5666.167.01.03.00 Z5666-BWL1 Z6011AV-WS1-BWN Z5955SS-EL	FLOOR MOUNTED 1.6 GPF ELONGATED SIPHON JET WATER CLOSET, INTEGRAL TRAP, VITREOUS CHINA, BOTTOM OUTLET, 16-3/4" TALL, BEDPAN LUGS EXPOSED DIAPHRAGM TYPE FLUSH VALVE W/ BEDPAN WASHER 1.6 GPF ELONGATED, OPEN FRONT, STAINLESS STEEL SELF-SUSTAINING CHECK HINGE	4"	2"	1"		PATIENT ROOMS ADA FLUSH VALVE HANDLE TO WIDESIDE OF ROOM BEDPAN LUGS
WC-2	ZURN ZURN ZURN	Z5665-BWL1 ZEMS6000AV-AS1 Z5955SS-EL	FLOOR MOUNTED 1.6 GPF ELONGATED SIPHON JET WATER CLOSET, INTEGRAL TRAP, VITREOUS CHINA, BOTTOM OUTLET, 16-3/4" TALL SENSOR OPERATED, 6VDC BATTERY POWER, 1.6 GPF, DIAPHRAGM FLUSH VALVE ELONGATED, OPEN FRONT, STAINLESS STEEL SELF-SUSTAINING CHECK HINGE	4"	2"	1"		ADA PUBLIC AREAS 6VC BATTERY POWER BY PLUMBING CONTRACTOR WHITE SOLID PLASTIC, SS HINGE & POSTS
WC-3	ZURN ZURN ZURN	Z5655-BWL1 ZEMS6000AV-AS1 Z5955SS-EL	FLOOR MOUNTED 1.6 GPF ELONGATED SIPHON JET WATER CLOSET, INTEGRAL TRAP, VITREOUS CHINA, BOTTOM OUTLET, 15" TALL SENSOR OPERATED, 6VDC BATTERY POWER, 1.28 GPF, DIAPHRAGM FLUSH VALVE ELONGATED, OPEN FRONT, STAINLESS STEEL SELF-SUSTAINING CHECK HINGE	4"	2"	1"		NON ADA PUBLIC AREAS 6VC BATTERY POWER BY PLUMBING CONTRACTOR WHITE SOLID PLASTIC, SS HINGE & POSTS
WC-4	ZURN ZURN ZURN	Z5665-BWL1 Z6000AV-WS1 Z5955SS-EL	FLOOR MOUNTED 1.6 GPF ELONGATED SIPHON JET WATER CLOSET, INTEGRAL TRAP, VITREOUS CHINA, BOTTOM OUTLET, 16-3/4" TALL MANUAL, 1.6 GPF, DIAPHRAGM FLUSH VALVE ELONGATED, OPEN FRONT, STAINLESS STEEL SELF-SUSTAINING CHECK HINGE	4"	2"	1"		ADA STAFF AREAS WHITE SOLID PLASTIC, SS HINGE & POSTS
WCO	ZURN	Z1446	CAST IRON BODY, ADJUSTABLE COLLAR, ABS TAPERED PLUG, CHROME PLATED ROUND WALL COVER	VARIES				SEE PLANS FOR PIPE SIZES
WMT	OATEY	38981	WASHING MACHINE BOX	2"	1-1/2"	1/2"	1/2"	

NOTES:
1. PROVIDE COLD WATER AND HOT WATER QUARTER TURN BALL STOPS AT ALL SINKS, LAVATORIES, ELECTRIC WATER COOLERS, ETC.
2. ALL WATER SUPPLIES AND STOPS SHALL BE INSTALLED SECURE TO BACKING IN WALL OR SUPPLY STRAPS AS REQUIRED FOR A SECURE, RIGID INSTALLATION.
3. PROVIDE ESCUTCHEONS AT ALL WASTE AND WATER SUPPLIES AT EACH FIXTURE. ESCUTCHEONS SHALL COMPLETELY COVER WALL OPENING.
4. ALL WALL HUNG WATER CLOSETS, URINALS AND LAVATORIES SHALL BE CAULKED/SEALED ALL AROUND INCLUDING THE UNDERSIDE. FLOOR MOUNTED WATER CLOSETS SHALL NOT BE CAULKED/SEALED TO FLOOR.
5. ALL COUNTER MOUNTED FIXTURES SHALL BE CAULKED/SEALED AS PER THE MANUFACTURERS INSTRUCTIONS.
6. COORDINATE ALL SELF RIMMING LAVATORIES AND SINKS WITH GENERAL CONTRACTOR AND CASEWORK SUPPLIER FOR FIT.
7. ALL A.D.A. COMPLIANT WATER CLOSETS SHALL HAVE FLUSHING MECHANISM TO OPEN SIDE OF ROOM OR STALL.
8. ALL EXPOSED P-TRAPS AND WATER SUPPLIES AT A.D.A. ACCESSIBLE LOCATIONS SHALL BE PROVIDED WITH COVERS AS SPECIFIED, COVERS ARE NOT NEEDED WHERE THERE ARE FINISHED PANELS AT ADA LOCATIONS, REFER TO ARCHITECTURAL DETAILS.

LEGEND
- BS = BEAUTY SINK
- BDTM = BRING DONUTS TO MEETINGS
- CO = CLEANOUT
- DS = DOWNSPOUT NOZZLE
- EEW = EMERGENCY EYEWASH
- ESHEW = EMERGENCY SHOWER / EYEWASH COMBO
- EWC = ELEC. WATER COOLER
- FD = FLOOR DRAIN
- FS = FLOOR SINK
- GI = GREASE INTERCEPTOR
- HB = HOSE BIB
- L = LAVATORY
- LT = LAUNDRY TUB
- MB = MOP BASIN
- S = SINK
- SOI = SAND OIL INTERCEPTOR
- SH = SHOWER
- TD = TRENCH DRAIN
- ORD = OVERFLOW ROOF DRAIN
- RD=ROOF DRAIN
- U = URINAL
- WC = WATER CLOSET
- WMT = WASHING MACHINE TRIM

EAPC
Architecture | Engineering
Interior Design | Industrial
TELEPHONE 701.258.3116
116 W. Main Ave., Suite A, Bismarck ND 58501
www.eapc.net

CONSULTANTS

CLIENT
VIBRA HOSPITALS OF THE CENTRAL DAKOTAS

PROJECT DESCRIPTION
BISMARCK REHABILITATION HOSPITAL

CITY BISMARCK
STATE NORTH DAKOTA

ISSUE DATES

MARK	DESCRIPTION	DATE
1	ADDENDUM #1	02/09/2026
CD	ISSUED FOR BIDDING	01/29/2026

PROJECT NO: 20251200
DRAWN BY: CBL
CHECKED BY: TMB

COPYRIGHT:
All plans, specifications, computer files, field data, notes and other documents and instruments prepared by EAPC as instruments of service shall remain the property of EAPC. EAPC shall retain all common law, statutory and other reserved rights, including the copyright there to.

STAMP

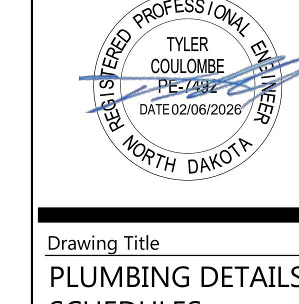

Drawing Title
PLUMBING DETAILS & SCHEDULES

P801

Revit Version: 2025
Plot Date: 2/6/2026 11:31:49 AM